PIAZZETTA
PASSIONE ACCESA

FIREPLACE PRICE LIST

SEPTEMBER 2022

FIREBOXES

WOOD-BURNING FIREBOXES 4-35
WOOD-BURNING OVENS AND STOVES 36-37
WOOD-BURNING INSERTS 38-44

PELLET FIREBOXES 45-52
PELLET INSERTS 53-60

WOOD-BURNING BOILER FIREBOXES 62-63
PELLET-BURNING VENTILATED THERMO INSERTS 64-66
ACCESSORIES FOR THERMO FIREBOXES AND THERMO INSERTS 67-73

COMMON ACCESSORIES 74-75

CLADDINGS

WALL FLUSH DESIGN. 76-79
I VENEZIANI 80-148
STOVE-FIREPLACES. 149-153

INDEX

FIREBOXES

MC BL compact single units with tilting door 4
MC 80/64 BL 5
MC 85/55 BL 5
MC 105/48 BL. 5
MC 133/52 BL. 5
ACCESSORIES FOR MC BL FIREBOXES. 6

MC SL compact single units with lifting door 7
MC 65/60 SL 8
MC 70/51 SL. 8
MC 90/44 SL 8
MC 120/48 SL. 9
ACCESSORIES FOR MC SL FIREBOXES. 10

MC compact fireboxes 12
MC 65/60 PLUS 13
MC 65/60 PLUS incl. ventilation mantle kit . .13
MC 65/60. 13
MC 70/51 14
MC 90/44. 14
MC 120/48 14
ACCESSORIES FOR MC FIREBOXES 15

ME stylish fireboxes 17
ME 70. 18
ME 90. 18
ME 90 B 19
ME 90 D/S 19
ACCESSORIES FOR ME FIREBOXES 20

MA SL PLUS fireboxes with rise n'fall door 21
MA 260 SL PLUS 22
MA 261 SL PLUS 22
MA 262 SL PLUS 23
MA 263 SL PLUS 23
MA 263 B SL PLUS. 24
MA 271 SL PLUS 24
MA 272 SL PLUS 25
MA 283 D/S SL PLUS. 25
MA 285 D/S SL PLUS. 26
ACCESSORIES FOR MA SL PLUS
MA SL PLUS. 27

MA SL fireboxes with rise n'fall door. 29
MA 260 SL 30
MA 260 SL 30
MA 260 B SL. 30
MA 261 SL 31
MA 261 SL 31
MA 262 SL 31
MA 263 SL 32
MA 263 SL 32
MA 264 SL 32
MA 265 SL 33
MA 271 SL 33
MA 272 SL 33
MA 283 D/S SL. 34
MA 285 D/S SL. 34
ACCESSORIES FOR MA SL FIREBOXES. . . . 35

Wood-burning ovens and stoves. 36
CHEF 72 37
CHEF 102 37

IL wood-burning inserts. 38
IL 52/57 M 39
IL 65/49 39
IL 65/54 39
IL 65/56 V 39
IL 75/58 40
IL 75/64 40
IL 75/66 V 40
E928 WF. 41
E928 WF Hermetic BCS 41
ACCESSORIES FOR IL INSERTS 42

Accessories - Pipes, elbows and unions for
wood-burning fireboxes and inserts 44

MP pellet fireboxes 45
MP 6. 46
MP 7. 47
MP 9. 48
MP 11 49
MP 980. 50
MP 980 Hermetic. 50
ACCESSORIES FOR MP FIREBOXES 51

IP pellet inserts. 53
IP 6 M Multifuoco System. 54
IP 7 M Multifuoco System. 54
IP 9 M Multifuoco System. 54
IP 11 M Multifuoco System 55
IP 7 FRAMELESS DOOR 55
IP 7 CAST IRON DOOR 55
IP 9 FRAMELESS DOOR 56
IP 9 CAST IRON DOOR 56
IP 11 FRAMELESS DOOR 56
IP 11 CAST IRON DOOR 57
ACCESSORIES FOR IP INSERTS 58

MP TH pellet boiler fireboxes 62
MP 973 TH 63
MP 973 TH ACS. 63

IP TH pellet-burning ventilated thermo inserts 64
IP 14 TH FRAMELESS DOOR 65
IP 14 TH CAST IRON DOOR. 66
ACCESSORIES FOR THERMO FIREBOXES
AND THERMO INSERTS. 67

Common accessories. 74

INDEX

CLADDINGS

WALL FLUSH DESIGN 76
HOBART WOOD 77
HOBART PELLET 79

I VENEZIANI 80
ACADEMY 81
ADELAIDE 82
AMBURGO 83
ARCHEO 84
BARCELLONA 85
BREMA 86
BRISTOL 87
BRISTOL CON PANCA 88
CALAIS 89
CAMBRIDGE 90
CANBERRA 91
CAPITAL 92
CHESTER 93
CITY 94
CLASS 95
COLONIA 96
COLORADO 97
COLUMBIA 98
CRUISE 99
DARWIN 100
DARWIN 101
DRESDA 102
EASY 103
EASY 104
EASY 105
EDINBURGH 106
EOS 107
ESSEN 108
ESSEN 109
FORUM 110
FOX 111
FOX 1 112
FREE 113
FRIBURGO 114
GALLERY 115
GRAZ 116
KENSINGTON 117
KOSMOS 118
LIFE 119
LINZ 120
LIPSIA 121
LITHOS 122
LUBECCA 123
MELBOURNE 124
MELBOURNE 125
MOOD 126
NEW ORLEANS 127
NEWPORT 128
PALEO 129
PHILADELPHIA 130
PHOENIX 131
PRESTON 132
SALISBURGO 133
SAN DIEGO 134
SHEFFIELD 135
SHUTTLE 136
SHUTTLE 1 137
SIGNS 138
SUN 139
SURFACE 140
VIENNA 141
VIENNA 142
VILLAGE 143
VISION 144
VOYAGER 145
WAYS 146
WITH YOU 147
ZEUS 148

STOVE-FIREPLACES 149
BERNA 150
DAVOS 151
LUGANO 152
BERNA PELLET 153

Piazzetta informs 154

General sales terms and conditions 155

MC BL COMPACT SINGLE UNITS WITH TILTING DOOR

Mod. MC 105/48 BL

CHARACTERISTICS

- Structure: enamelled steel, closed firebox
- Fire chamber: in Aluker®
- Fire grate: in Aluker®
- Opening: door in enamelled steel with self-cleaning ceramic glass resistant up to 750 C°. Hinged opening with tilting opening
- Door profile: in painted steel
- Door handle: removable
- Primary air: adjustable manually
- Secondary air: manual
- Tertiary air: fixed and preheated
- Flue outlet: top
- Fuel: wood
- Heating: natural convection, radiant and forced ventilation kit optional through Multifuoco System® or Multifuoco System Plus, ducting
- Grille for hood, external air intake grille with remote control: optional

ACCESSORIES ON REQUEST

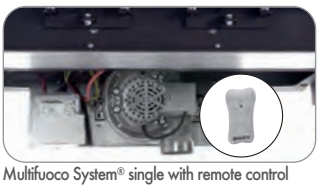

Multifuoco System® single with remote control

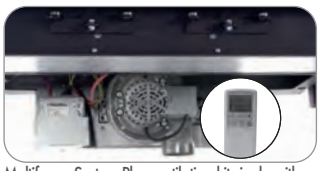

Multifuoco System Plus ventilation kit single with LCD remote control

Warm air distribution accessories

Grilles and air vents

Fitting and accessories for hot air ducting for natural convection

Adjustable legs kit H 38-45cm

Combustion air kit and accessories

Ash vacuum cleaner

Pipes, bends, couplings for flue pipe

Prices are considered to be without sales taxes. Gruppo Piazzetta S.p.A. reserves the right to modify and/or delete all printed material, if deemed necessary by Gruppo Piazzetta without any written or prior notice.
Document reserved for the Gruppo Piazzetta S.p.A. sales organisation.

FIREBOXES MC BL

MC 80/64 BL

FIREBOX	DRAWING	VERSION	CODE	EURO
MC 80/64 BL		CLOSED	P04826400C	**3.495,00**

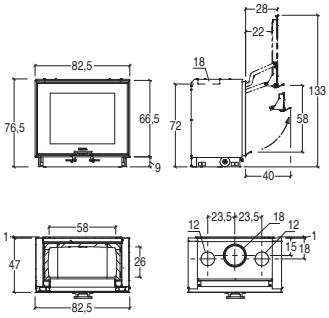

Model	Type	Energy efficiency class	Nominal heat output	Nominal thermal efficiency	Nominal consumption	Weight
MC 80/64 BL	MC 65/60	A	11,0 kW	80,0 %	3,1 kg/h	175 kg

Compatible surrounds

Easy, Berna, Davos, Lugano

ECO DESIGN — ENERGY EFFIC. CLASS A

MC 85/55 BL

FIREBOX	DRAWING	VERSION	CODE	EURO
MC 85/55 BL		CLOSED	P04825500C	**3.515,00**

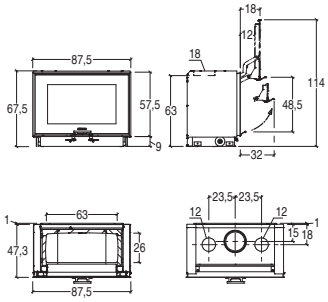

Model	Type	Energy efficiency class	Nominal heat output	Nominal thermal efficiency	Nominal consumption	Weight
MC 85/55 BL	MC 70/51	A	11,0 kW	79,0 %	2,9 kg/h	160 kg

Compatible surrounds

Adelaide, Berna, Davos, Easy, Lugano, Newport

ECO DESIGN — ENERGY EFFIC. CLASS A

MC 105/48 BL

FIREBOX	DRAWING	VERSION	CODE	EURO
MC 105/48 BL		CLOSED	P04824800C	**3.850,00**

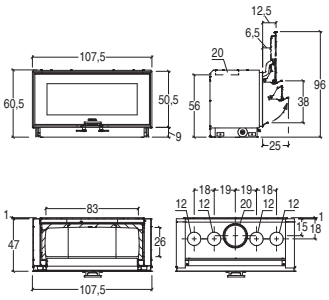

Model	Type	Energy efficiency class	Nominal heat output	Nominal thermal efficiency	Nominal consumption	Weight
MC 105/48 BL	MC 90/44	A	12,2 kW	79,3 %	3,2 kg/h	180 kg

Compatible surrounds

Easy, Berna, Davos, Lugano

ECO DESIGN — ENERGY EFFIC. CLASS A

MC 133/52 BL

FIREBOX	DRAWING	VERSION	CODE	EURO
MC 133/52 BL		CLOSED	P04825200C	**4.670,00**

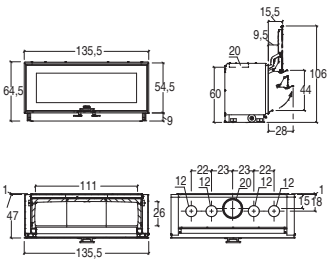

Model	Type	Energy efficiency class	Nominal heat output	Nominal thermal efficiency	Nominal consumption	Weight
MC 133/52 BL	MC 120/48	A	14,1 kW	78,9 %	3,8 kg/h	230 kg

Compatible surrounds

Easy, Berna, Davos, Lugano

ECO DESIGN — ENERGY EFFIC. CLASS A

Prices are considered to be without sales taxes. Gruppo Piazzetta S.p.A. reserves the right to modify and/or delete all printed material, if deemed necessary by Gruppo Piazzetta without any written or prior notice.
Document reserved for the Gruppo Piazzetta S.p.A. sales organisation.

FIREBOXES MC BL

Accessories

MULTIFUOCO SYSTEM®

	ITEM	INTERNAL COMPATIBLE	CODE	EURO
	Multifuoco System® single	All models	P08020390C	690,00

MULTIFUOCO SYSTEM PLUS

	ITEM	INTERNAL COMPATIBLE	CODE	EURO
	Multifuoco System Plus single	All models	P08020460C	865,00

FEET KIT

	ITEM	INTERNAL COMPATIBLE	CODE	EURO
	Adjustable legs kit H 38 - 45 cm	All models	P08014670C	355,00

COMBUSTION AIR KIT

	ITEM	INTERNAL COMPATIBLE	CODE	EURO
	Combustion air kit	MC 80/64 BL	P08018250C	175,00
		MC 85/55 BL	P08014680C	175,00
		MC 105/48 BL	P08014690C	175,00
		MC 133/52 BL	P08014860C	175,00
	Ø 12 cm pipe for air connection (3 metre pack)	All models	P08010360	30,00 per pack (3 metres)

NATURAL CONVECTION ACCESSORIES

	ITEM	INTERNAL COMPATIBLE	CODE	EURO
	Hot air Ø 12 cm pipe union, collar for the connection to the firebox shell	All models	P08010630	7,00
	Ø 12 cm pipe for air connection (3 metre pack)	All models	P08010360	30,00 per pack (3 metres)
	Closing kit for natural convection	All models	P08062740C	20,00

GRILLES

	ITEM	DIMENSIONS IN CM	INTERNAL COMPATIBLE	UNITS PER PACK	CODE	EURO
	White-painted aluminium grille for hood	14 x 39	All models	5	N08010001	30,00
	White-painted aluminium intake grille	17 x 17	All models	5	N08010002	39,00

EXTERNAL AIR INTAKE GRILLE

	ITEM	DIMENSIONS IN CM	INTERNAL COMPATIBLE	UNITS PER PACK	CODE	EURO
	Black-painted steel grille with remote control (W. max. 2 m)	15 x 20	MC 80/64 BL - MC 85/55 BL	5	N08010003	172,00
		15 x 35	MC 105/48 BL - MC 133/52 BL	5	N08010004	174,00
	Black-painted steel grille with remote control	15 x 20	MC 80/64 BL - MC 85/55 BL	5	N08010005	80,00
		15 x 35	MC 105/48 BL - MC 133/52 BL	5	N08010006	90,00
	White-painted aluminium grille with manual control	17,5 x 27,5	MC 80/64 BL - MC 85/55 BL	5	N08010007	39,00
		17,5 x 32,5	MC 105/48 BL - MC 133/52 BL	5	N08010008	39,00

ASH VACUUM CLEANER

	ITEM	INTERNAL COMPATIBLE	CODE	EURO
	Ash vacuum cleaner	All models	N08019040C	100,00

Prices are considered to be without sales taxes. Gruppo Piazzetta S.p.A. reserves the right to modify and/or delete all printed material, if deemed necessary by Gruppo Piazzetta without any written or prior notice.
Document reserved for the Gruppo Piazzetta S.p.A. sales organisation.

MC SL COMPACT SINGLE UNITS WITH LIFTING DOOR

Mod. MC 90/44 SL

CHARACTERISTICS

- Structure: enamelled steel, closed firebox
- Fire chamber: in Aluker®
- Fire grate: in Aluker®
- Opening: door in enamelled steel with self-cleaning ceramic glass resistant up to 750 C°. Rise n'fall door, hinged opening for cleaning
- Door profile: in painted steel
- Door handle: removable
- Primary air: adjustable manually
- Secondary air: manual
- Tertiary air: fixed and preheated
- Flue outlet: top
- Fuel: wood
- Heating: natural convection, radiant and forced ventilation kit optional through Multifuoco System® or Multifuoco System Plus, ducting
- Grille for hood, external air intake grille with remote control: optional

ACCESSORIES ON REQUEST

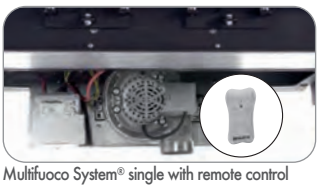

Multifuoco System® single with remote control

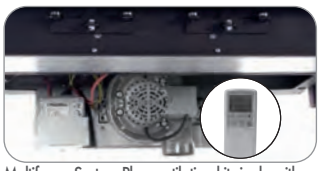

Multifuoco System Plus ventilation kit single with LCD remote control

Warm air distribution accessories

Grilles and air vents

Fitting and accessories for hot air ducting for natural convection

Adjustable legs kit H 38-45cm

Combustion air kit and accessories

Removable handles kit

Edge profile

Ash vacuum cleaner

Pipes, bends, couplings for flue pipe

Prices are considered to be without sales taxes. Gruppo Piazzetta S.p.A. reserves the right to modify and/or delete all printed material, if deemed necessary by Gruppo Piazzetta without any written or prior notice.
Document reserved for the Gruppo Piazzetta S.p.A. sales organisation.

FIREBOXES MC SL

MC 65/60 SL

FIREBOX	DRAWING	VERSION	CODE	EURO
MC 65/60 SL		CLOSED	P04816000C	**3.825,00**

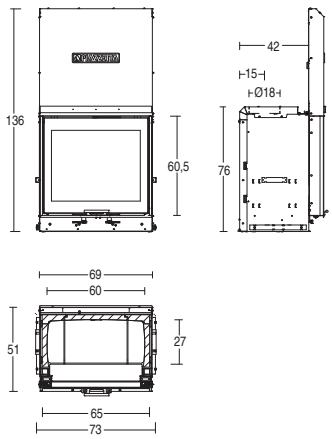

Model	Type	Energy efficiency class	Nominal heat output	Nominal thermal efficiency	Nominal consumption	Weight
MC 65/60 SL	MC 65/60	A	11,0 kW	80,0 %	3,1 kg/h	202 kg

Compatible surrounds

Barcellona	Colonia	Darwin
Easy	Essen	Melbourne
Vienna		

ECO DESIGN

ENERGY EFFIC. CLASS

MC 70/51 SL

FIREBOX	DRAWING	VERSION	CODE	EURO
MC 70/51 SL		CLOSED	P04815100C	**3.855,00**

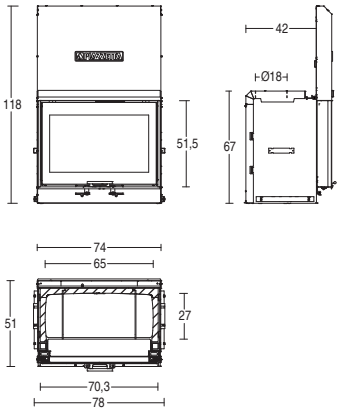

Model	Type	Energy efficiency class	Nominal heat output	Nominal thermal efficiency	Nominal consumption	Weight
MC 70/51 SL	MC 70/51	A	11,0 kW	79,0 %	2,9 kg/h	195 kg

Compatible surrounds

Academy	Amburgo	Brema
City	Class	Colonia
Darwin	Dresda	Easy
Essen	Forum	Friburgo
Gallery	Life	Lipsia
Lithos	Lubecca	Paleo
Vienna	Vision	Voyager
Ways	With You	Zeus

ECO DESIGN

ENERGY EFFIC. CLASS

MC 90/44 SL

FIREBOX	DRAWING	VERSION	CODE	EURO
MC 90/44 SL		CLOSED	P04814400C	**4.170,00**

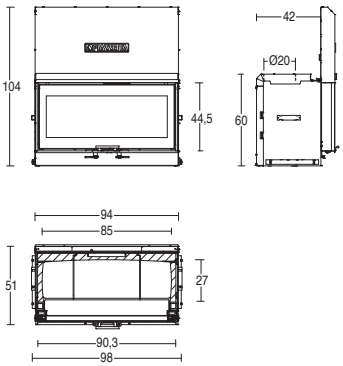

Model	Type	Energy efficiency class	Nominal heat output	Nominal thermal efficiency	Nominal consumption	Weight
MC 90/44 SL	MC 90/44	A	12,2 kW	79,3 %	3,2 kg/h	160 kg

Compatible surrounds

Amburgo	Cambridge	Canberra
Chester	Colonia	Colorado
Columbia	Easy	Essen
Fox	Fox 1	Friburgo
Graz	Linz	Lipsia
New Orleans	Salisburgo	San Diego

ECO DESIGN

ENERGY EFFIC. CLASS

Prices are considered to be without sales taxes. Gruppo Piazzetta S.p.A. reserves the right to modify and/or delete all printed material, if deemed necessary by Gruppo Piazzetta without any written or prior notice.
Document reserved for the Gruppo Piazzetta S.p.A. sales organisation.

FIREBOXES MC SL

MC 120/48 SL

FIREBOX	DRAWING	VERSION	CODE	EURO
MC 120/48 SL		CLOSED	P04814800C	**4.950,00**

Model	Type	Energy efficiency class	Nominal heat output	Nominal thermal efficiency	Nominal consumption	Weight
MC 120/48 SL	MC 120/48	A	14,1 kW	78,9 %	3,8 kg/h	280 kg

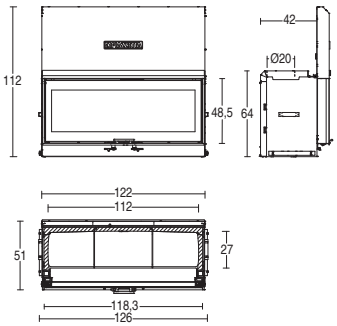

Compatible surrounds

Amburgo	Colonia	Easy
Essen	Friburgo	Graz
Linz	Lipsia	Philadelphia
Phoenix	Salisburgo	Village

ECO DESIGN

ENERGY EFFIC. CLASS

Prices are considered to be without sales taxes. Gruppo Piazzetta S.p.A. reserves the right to modify and/or delete all printed material, if deemed necessary by Gruppo Piazzetta without any written or prior notice.
Document reserved for the Gruppo Piazzetta S.p.A. sales organisation.

FIREBOXES MC SL

Accessories

MULTIFUOCO SYSTEM®

	ITEM	INTERNAL COMPATIBLE	CODE	EURO
	Multifuoco System® single	All models	P08020390C	690,00

MULTIFUOCO SYSTEM PLUS

	ITEM	INTERNAL COMPATIBLE	CODE	EURO
	Multifuoco System Plus single	All models	P08020460C	865,00

FEET KIT

	ITEM	INTERNAL COMPATIBLE	CODE	EURO
	Adjustable legs kit H 38 - 45 cm	All models	P08014670C	355,00

COMBUSTION AIR KIT

	ITEM	INTERNAL COMPATIBLE	CODE	EURO
	Combustion air kit	MC 65/60 SL	P08018250C	175,00
		MC 70/51 SL	P08014680C	175,00
		MC 90/44 SL	P08014690C	175,00
		MC 120/48 SL	P08014860C	175,00
	Ø 12 cm pipe for air connection (3 metre pack)	All models	P08010360	30,00 per pack (3 metres)

ACCESSORIES FOR INSTALLATION

	ITEM	INTERNAL COMPATIBLE	CODE	EURO
	Handles kit	All models	P08014450C	40,00

NATURAL CONVECTION ACCESSORIES

	ITEM	INTERNAL COMPATIBLE	CODE	EURO
	Hot air Ø 12 cm pipe union, collar for the connection to the firebox shell	All models	P08010630	7,00
	Ø 12 cm pipe for air connection (3 metre pack)	All models	P08010360	30,00 per pack (3 metres)
	Closing kit for natural convection	All models	P08062740C	20,00

GRILLES

	ITEM	DIMENSIONS IN CM	INTERNAL COMPATIBLE	UNITS PER PACK	CODE	EURO
	White-painted aluminium grille for hood	14 x 39	All models	5	N08010001	30,00
	White-painted aluminium intake grille	17 x 17	All models	5	N08010002	39,00

Prices are considered to be without sales taxes. Gruppo Piazzetta S.p.A. reserves the right to modify and/or delete all printed material, if deemed necessary by Gruppo Piazzetta without any written or prior notice.
Document reserved for the Gruppo Piazzetta S.p.A. sales organisation.

FIREBOXES MC SL

Accessories

EXTERNAL AIR INTAKE GRILLE

ITEM	DIMENSIONS IN CM	INTERNAL COMPATIBLE	UNITS PER PACK	CODE	EURO
Black-painted steel grille with remote control (W. max. 2 m)	15 x 20	MC 65/60 SL MC 70/51 SL	5	N08010003	172,00
	15 x 35	MC 90/44 SL MC 120/48 SL	5	N08010004	174,00
Black-painted steel grille with remote control	15 x 20	MC 65/60 SL MC 70/51 SL	5	N08010005	80,00
	15 x 35	MC 90/44 SL MC 120/48 SL	5	N08010006	90,00
White-painted aluminium grille with manual control	17,5 x 27,5	MC 65/60 SL MC 70/51 SL	5	N08010007	39,00
	17,5 x 32,5	MC 90/44 SL MC 120/48 SL	5	N08010008	39,00

ASH VACUUM CLEANER

ITEM	INTERNAL COMPATIBLE	CODE	EURO
Ash vacuum cleaner	All models	N08019040C	100,00

EDGE PROFILE

ITEM	INTERNAL COMPATIBLE	CODE	EURO
Black-painted steel edge profile, for masonry finishes	MC 70/51 SL	P08013410C	370,00
	MC 65/60 SL	P08013440C	370,00
	MC 90/44 SL	P08013450C	370,00
	MC 120/48 SL	P08013470C	370,00

Prices are considered to be without sales taxes. Gruppo Piazzetta S.p.A. reserves the right to modify and/or delete all printed material, if deemed necessary by Gruppo Piazzetta without any written or prior notice.
Document reserved for the Gruppo Piazzetta S.p.A. sales organisation.

MC COMPACT FIREBOXES

Mod. MC 65/60 PLUS

Mod. MC 65/60 PLUS
incl. ventilation mantle kit

CHARACTERISTICS

- Airtight firebox: MC Plus version
- Structure: enamelled steel, closed firebox
- Fire chamber: in Aluker®
- Fire grate: in Aluker®
- Opening: door in enamelled steel with self-cleaning ceramic glass resistant up to 750 C°. Hinged opening, reversible
- Door profile: in painted steel
- Door handle: hide away and detachable
- Primary air: adjustable manually
- Secondary air: manual
- Tertiary air: fixed and preheated
- Flue outlet: top
- Fuel: wood
- Heating: natural convection, radiant and forced ventilation kit optional through Multifuoco System® or Multifuoco System Plus, ducting
- Grille for hood, external air intake grille with remote control: optional

ACCESSORIES ON REQUEST

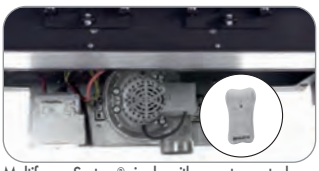

Multifuoco System® single with remote control (for all models)

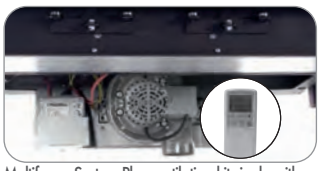

Multifuoco System Plus ventilation kit single with LCD remote control (for all models)

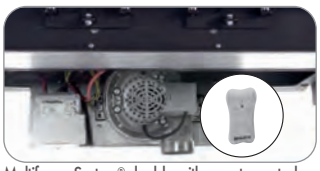

Multifuoco System® double with remote control (only for MC Plus)

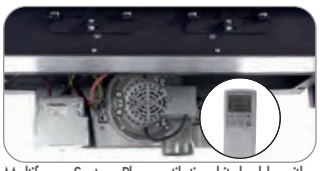

Multifuoco System Plus ventilation kit double with LCD remote control (only for MC Plus)

Warm air distribution accessories

Grilles and air vents

Fitting and accessories for hot air ducting for natural convection

Adjustable legs kit H 38-45cm

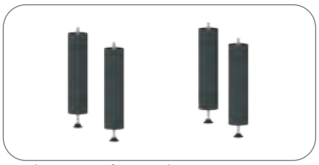

Legs kit H 38 cm for MC Plus

Combustion air kit and accessories

Removable handles kit

Ash vacuum cleaner

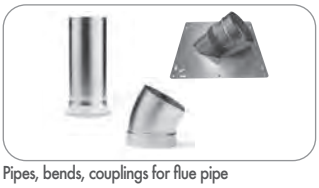

Pipes, bends, couplings for flue pipe

Prices are considered to be without sales taxes. Gruppo Piazzetta S.p.A. reserves the right to modify and/or delete all printed material, if deemed necessary by Gruppo Piazzetta without any written or prior notice.
Document reserved for the Gruppo Piazzetta S.p.A. sales organisation.

FIREBOXES MC PLUS

MC 65/60 PLUS

FIREBOX	DRAWING	VERSION	CODE	EURO
MC 65/60 PLUS		CLOSED	P04836000C	**3.110,00**

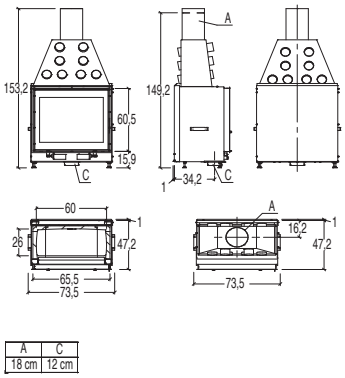

MC 65/60 PLUS

Model	Type	Energy efficiency class	Nominal heat output	Nominal thermal efficiency	Nominal consumption	Weight
MC 65/60 PLUS	MC65/60-01	A+	10,0 kW	87,0 %	2,8 kg/h	195 kg

ACCESSORIES ON REQUEST		
Ventilation mantle kit MC 65/60 PLUS *	P08062210C	390,00

* Essential for the installation of the Multifuoco kit.

Compatible surrounds

Barcellona	Colonia	Darwin
Easy	Essen	Melbourne
Vienna		

ECO DESIGN

ENERGY EFFIC. CLASS

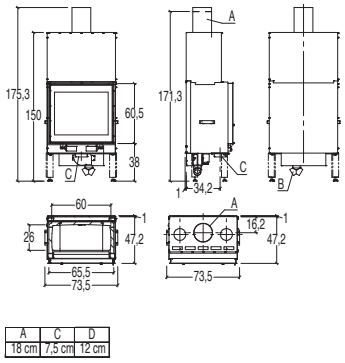

MC 65/60 PLUS INCL.
VENTILATION MANTLE KIT

MC 65/60

FIREBOX	DRAWING	VERSION	CODE	EURO
MC 65/60		CLOSED	P04806000C	**2.505,00**

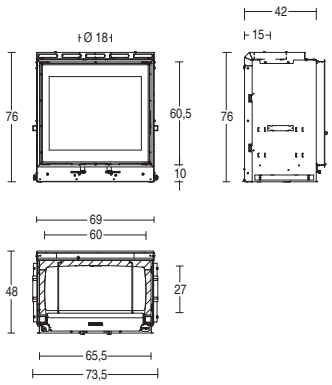

Model	Type	Energy efficiency class	Nominal heat output	Nominal thermal efficiency	Nominal consumption	Weight
MC 65/60	MC 65/60	A	11,0 kW	80,0 %	3,1 kg/h	155 kg

Compatible surrounds

Barcellona	Colonia	Darwin
Easy	Essen	Melbourne
Vienna		

ECO DESIGN

ENERGY EFFIC. CLASS

Prices are considered to be without sales taxes. Gruppo Piazzetta S.p.A. reserves the right to modify and/or delete all printed material, if deemed necessary by Gruppo Piazzetta without any written or prior notice.
Document reserved for the Gruppo Piazzetta S.p.A. sales organisation.

FIREBOXES MC - MC PLUS

MC 70/51

FIREBOX	DRAWING	VERSION	CODE	EURO
MC 70/51		CLOSED	P04805100C	**2.535,00**

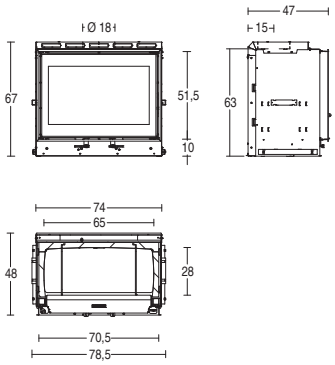

Model	Type	Energy efficiency class	Nominal heat output	Nominal thermal efficiency	Nominal consumption	Weight
MC 70/51	MC 70/51	A	11,0 kW	79,0 %	2,9 kg/h	140 kg

Compatible surrounds

Academy	Amburgo	Brema
City	Class	Colonia
Darwin	Dresda	Easy
Essen	Forum	Friburgo
Gallery	Life	Lipsia
Lithos	Lubecca	Paleo
Preston	Shuttle	Shuttle 1
Vienna	Vision	Voyager
Ways	With You	Zeus

ECO DESIGN

ENERGY EFFIC. CLASS

MC 90/44

FIREBOX	DRAWING	VERSION	CODE	EURO
MC 90/44		CLOSED	P04804400C	**2.770,00**

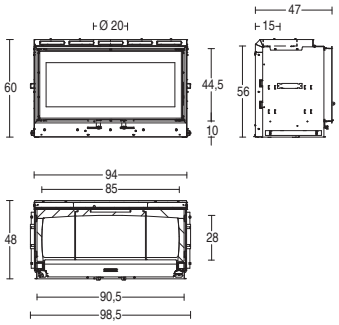

Model	Type	Energy efficiency class	Nominal heat output	Nominal thermal efficiency	Nominal consumption	Weight
MC 90/44	MC 90/44	A	12,2 kW	79,3 %	3,2 kg/h	160 kg

Compatible surrounds

Amburgo	Calais	Cambridge
Canberra	Chester	Colonia
Colorado	Columbia	Easy
Essen	Fox	Fox 1
Free	Friburgo	Graz
Hobart	Kosmos	Linz
Lipsia	New Orleans	Salisburgo
San Diego	Signs	

ECO DESIGN

ENERGY EFFIC. CLASS

MC 120/48

FIREBOX	DRAWING	VERSION	CODE	EURO
MC 120/48		CLOSED	P04804800C	**3.355,00**

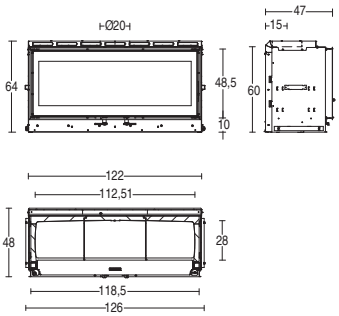

Model	Type	Energy efficiency class	Nominal heat output	Nominal thermal efficiency	Nominal consumption	Weight
MC 120/48	MC 120/48	A	14,1 kW	78,9 %	3,8 kg/h	200 kg

Compatible surrounds

Amburgo	Archeo	Capital
Colonia	Easy	Eos
Essen	Friburgo	Graz
Linz	Lipsia	Philadelphia
Phoenix	Salisburgo	Sun
Surface	Village	

ECO DESIGN

ENERGY EFFIC. CLASS

Prices are considered to be without sales taxes. Gruppo Piazzetta S.p.A. reserves the right to modify and/or delete all printed material, if deemed necessary by Gruppo Piazzetta without any written or prior notice.
Document reserved for the Gruppo Piazzetta S.p.A. sales organisation.

FIREBOXES MC - MC PLUS

Accessories

MULTIFUOCO SYSTEM®

	ITEM	INTERNAL COMPATIBLE	CODE	EURO
	Multifuoco System® single	All MC models	P08020390C	690,00
		All MC Plus models	P08027620C	690,00

MULTIFUOCO SYSTEM PLUS

	ITEM	INTERNAL COMPATIBLE	CODE	EURO
	Multifuoco System Plus single	All MC models	P08020460C	865,00
		All MC Plus models	P08027640C	865,00
	Multifuoco System Plus double	All MC Plus models	P08027520C	1.230,00

VENTILATION MANTLE KIT

	ITEM	INTERNAL COMPATIBLE	CODE	EURO
	Ventilation mantle kit	MC 65/60 PLUS	P08062210C	390,00

FEET KIT

	ITEM	INTERNAL COMPATIBLE	CODE	EURO
	Adjustable legs kit H 38 - 45 cm	All MC models	P08014670C	355,00
	Adjustable legs kit H 38 cm	All MC Plus models	P08061800C	145,00

COMBUSTION AIR KIT

	ITEM	INTERNAL COMPATIBLE	CODE	EURO
	Combustion air kit	MC 65/60 (Not compatible with MC 65/60 PLUS)	P08018250C	175,00
		MC 70/51	P08014680C	175,00
		MC 90/44	P08014690C	175,00
		MC 120/48	P08014860C	175,00
	Ø 12 cm pipe for air connection (3 metre pack)	All models	P08010360	30,00 per pack (3 metres)

ACCESSORIES FOR INSTALLATION

	ITEM	INTERNAL COMPATIBLE	CODE	EURO
	Handles kit	All models	P08014450C	40,00

Prices are considered to be without sales taxes. Gruppo Piazzetta S.p.A. reserves the right to modify and/or delete all printed material, if deemed necessary by Gruppo Piazzetta without any written or prior notice.
Document reserved for the Gruppo Piazzetta S.p.A. sales organisation.

FIREBOXES MC - MC PLUS

Accessories

NATURAL CONVECTION ACCESSORIES

	ITEM	INTERNAL COMPATIBLE	CODE	EURO
	Hot air Ø 12 cm pipe union, collar for the connection to the firebox shell	All models	P08010630	7,00
	Ø 12 cm pipe for air connection (3 metre pack)	All models	P08010360	30,00 per pack (3 metres)
	Closing kit for natural convection	All models	P08062740C	20,00

GRILLES

	ITEM	DIMENSIONS IN CM	INTERNAL COMPATIBLE	UNITS PER PACK	CODE	EURO
	White-painted aluminium grille for hood	14 x 39	All models	5	N08010001	30,00
	White-painted aluminium intake grille	17 x 17	All models	5	N08010002	39,00

EXTERNAL AIR INTAKE GRILLE

	ITEM	DIMENSIONS IN CM	INTERNAL COMPATIBLE	UNITS PER PACK	CODE	EURO
	Black-painted steel grille with remote control (W. max. 2 m)	15 x 20	MC 65/60 P - MC 65/60 - MC 70/51	5	N08010003	172,00
		15 x 35	MC 90/44 - MC 120/48	5	N08010004	174,00
	Black-painted steel grille with remote control	15 x 20	MC 65/60 P - MC 65/60 - MC 70/51	5	N08010005	80,00
		15 x 35	MC 90/44 - MC 120/48	5	N08010006	90,00
	White-painted aluminium grille with manual control	17,5 x 27,5	MC 65/60 P - MC 65/60 - MC 70/51	5	N08010007	39,00
		17,5 x 32,5	MC 90/44 - MC 120/48	5	N08010008	39,00

ASH VACUUM CLEANER

	ITEM	INTERNAL COMPATIBLE	CODE	EURO
	Ash vacuum cleaner	All models	N08019040C	100,00

Prices are considered to be without sales taxes. Gruppo Piazzetta S.p.A. reserves the right to modify and/or delete all printed material, if deemed necessary by Gruppo Piazzetta without any written or prior notice.
Document reserved for the Gruppo Piazzetta S.p.A. sales organisation.

ME STYLISH FIREBOXES

Mod. ME 90

CHARACTERISTICS

- Structure: enamelled steel, closed firebox
- Fire chamber: in Aluker®
- Fire grate: in cast-iron
- Hood: in steel
- Opening: enamelled steel door with self-cleaning ceramic glass resistant up to 750°C. Rise n'fall door for wood loading, hinged opening for cleaning
- Door profile for flush dry wall installation: in painted steel 12 cm depth.
- Handle: in painted steel, removable
- Primary air: adjustable manually
- Secondary air: fixed
- Outside air intake: with optional kit
- Flue outlet: top
- Flue register: manual valve opening with console on firebox
- Ash pan: removable
- Fuel: wood
- Natrural convection heating, radiant or forced ventelation is optyional with Multifuoco system or Multifuoco Plus, ductable. ME 90 B non compatable with Multifuoco System and Multifuoco System Plus.
- Hood vent and external air intake with manual control: standard

ACCESSORIES ON REQUEST

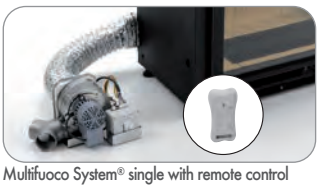

Multifuoco System® single with remote control

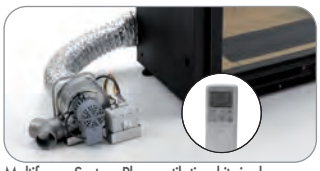

Multifuoco System Plus ventilation kit single or double with LCD remote control

Warm air distribution accessories

Grilles and air vents

Legs kit H 38cm

Leveling legs kit

Fitting and accessories for hot air ducting for natural convection

Ash vacuum cleaner

Pipes, bends, couplings for flue pipe

Combustion air kit and accessories

Prices are considered to be without sales taxes. Gruppo Piazzetta S.p.A. reserves the right to modify and/or delete all printed material, if deemed necessary by Gruppo Piazzetta without any written or prior notice.
Document reserved for the Gruppo Piazzetta S.p.A. sales organisation.

FIREBOXES ME

ME 70

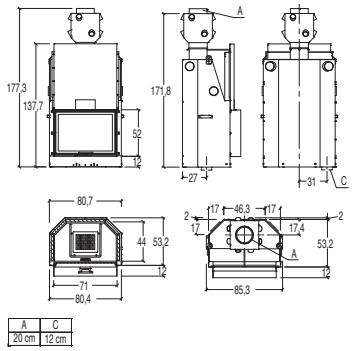

ME 70

FIREBOX	DRAWING	VERSION	CODE	EURO
ME 70		CLOSED	P04907000C	**3.270,00**

Model	Type	Energy efficiency class	Nominal heat output	Nominal thermal efficiency	Nominal consumption	Weight
ME 70	ME70-01	A+	14,5 kW	88 %	4,0 kg/h	225-282 kg

ACCESSORIES ON REQUEST		
Ventilation mantle kit ME 70 *	P08062400C	650,00

* Essential for the installation of the Multifuoco kit.

Compatible surrounds

—

ECO DESIGN

ENERGY EFFIC. CLASS

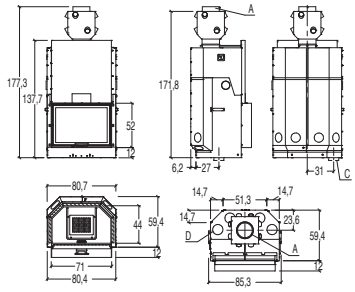

ME 70 WITH HOOD COVER
(to be mounted during installation phase)

ME 90

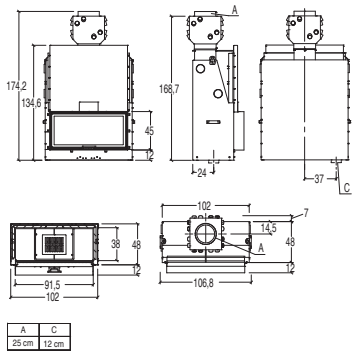

ME 90

FIREBOX	DRAWING	VERSION	CODE	EURO
ME 90		CLOSED	P04909000C	**4.105,00**

Model	Type	Energy efficiency class	Nominal heat output	Nominal thermal efficiency	Nominal consumption	Weight
ME 90	ME90-01	A+	14,0 kW	86,0 %	4,0 kg/h	295-330 kg

ACCESSORIES ON REQUEST		
Ventilation mantle kit ME 90 *	P08062410C	505,00

* Essential for the installation of the Multifuoco kit.

Compatible surrounds

—

ECO DESIGN

ENERGY EFFIC. CLASS

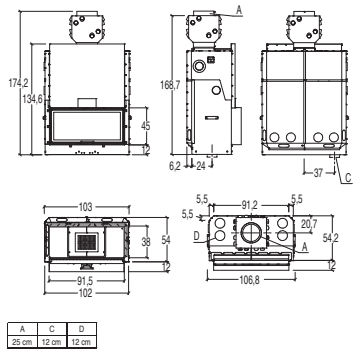

ME 90 WITH HOOD COVER
(to be mounted during installation phase)

Prices are considered to be without sales taxes. Gruppo Piazzetta S.p.A. reserves the right to modify and/or delete all printed material, if deemed necessary by Gruppo Piazzetta without any written or prior notice.
Document reserved for the Gruppo Piazzetta S.p.A. sales organisation.

FIREBOXES ME

ME 90 B

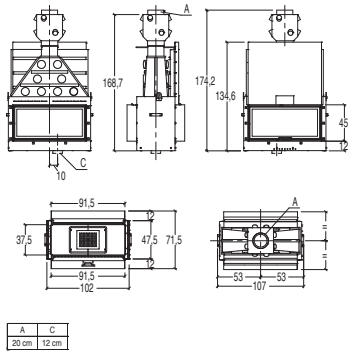

A	C
20 cm	12 cm

ME 90 B

FIREBOX	DRAWING	VERSION	CODE	EURO
ME 90 B	[ ]	CLOSED	P04909100C	**5.275,00**

Model	Type	Energy efficiency class	Nominal heat output	Nominal thermal efficiency	Nominal consumption	Weight
ME 90 B	ME90B-01	A+	15,0 kW	82,5 %	4,54 kg/h	275-300 kg

ACCESSORIES ON REQUEST		
Ventilation mantle kit ME 90 B	P08062800C	475,00

* Essential for the installation of the Multifuoco kit.

Compatible surrounds

—

ECO DESIGN

ENERGY EFFIC. CLASS

Product coming soon

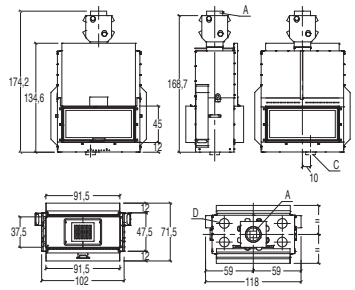

A	C	D
20 cm	12 cm	12 cm

ME 90 B WITH HOOD COVER
(to be mounted during installation phase)

ME 90 D/S

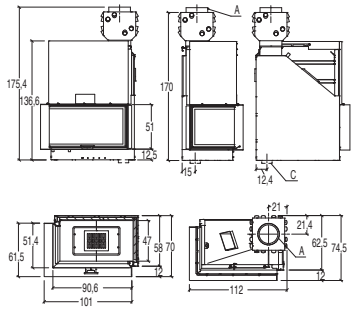

A	C
25 cm	12 cm

ME 90 D/S

FIREBOX	DRAWING	VERSION	CODE	EURO
ME 90 D	[ ]	RIGHT	P04909250C	**5.595,00**
ME 90 S	[ ]	LEFT	P04909260C	**5.595,00**

Model	Type	Energy efficiency class	Nominal heat output	Nominal thermal efficiency	Nominal consumption	Weight
ME 90 D ME 90 S	ME90DS-01	A+	16,0 kW	81,0 %	4,8 kg/h	330-365 kg

ACCESSORIES ON REQUEST		
Ventilation mantle kit ME 90 D *	P08062430C	370,00
Ventilation mantle kit ME 90 S *	P08062440C	370,00

* Essential for the installation of the Multifuoco kit.

Compatible surrounds

—

ECO DESIGN

ENERGY EFFIC. CLASS

Product coming soon

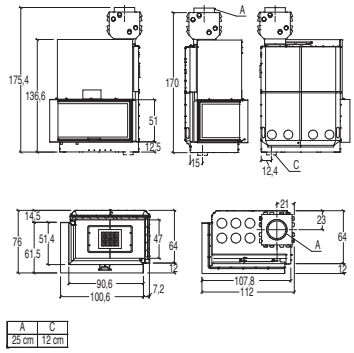

A	C
25 cm	12 cm

ME 90 D/S CON MANTELLO CAPPA
(to be mounted during installation phase)

Prices are considered to be without sales taxes. Gruppo Piazzetta S.p.A. reserves the right to modify and/or delete all printed material, if deemed necessary by Gruppo Piazzetta without any written or prior notice.
Document reserved for the Gruppo Piazzetta S.p.A. sales organisation.

FIREBOXES ME

Accessories

MULTIFUOCO SYSTEM®

	ITEM	INTERNAL COMPATIBLE	CODE	EURO
	Multifuoco System® single	ME 70, ME 90, ME 90 D, ME 90 S	P08027530C	650,00

MULTIFUOCO SYSTEM PLUS

	ITEM	INTERNAL COMPATIBLE	CODE	EURO
	Multifuoco System Plus single	ME 70, ME 90, ME 90 D, ME 90 S	P08027550C	835,00
	Multifuoco System Plus double	ME 70, ME 90, ME 90 D, ME 90 S	P08027560C	1.115,00

VENTILATION MANTLE KIT

	ITEM	INTERNAL COMPATIBLE	CODE	EURO
	Ventilation mantle kit	ME 70	P08062400C	650,00
		ME 90	P08062410C	505,00
		ME 90 D	P08062430C	370,00
		ME 90 S	P08062440C	370,00
		ME 90 B	P08062800C	475,00

FEET KIT

	ITEM	INTERNAL COMPATIBLE	CODE	EURO
	Legs kit H 38cm	All models	P08014360C	175,00
	Leveling legs kit H 2-3 cm	All models	P08017890C	25,00

NATURAL CONVECTION ACCESSORIES

	ITEM	INTERNAL COMPATIBLE	CODE	EURO
	Hot air Ø 12 cm pipe union, collar for the connection to the firebox shell	All models	P08010630	7,00
	Ø 12 cm pipe for air connection (3 metre pack)	All models	P08010360	30,00 per pack (3 metres)
	Closing kit for natural convection	All models	P08062730C	20,00

COMBUSTION AIR KIT

	ITEM	INTERNAL COMPATIBLE	CODE	EURO
	Combustion air kit composed of collar, clamp and 3 metres of 12 cm Ø hose	All models	P08017410C	90,00
	Ø 12 cm pipe for air connection (3 metre pack)	All models	P08010360	30,00 per pack (3 metres)

ACCESSORIES FOR INSTALLATION

	ITEM	INTERNAL COMPATIBLE	CODE	EURO
	Handles kit	ME 70 - ME 90 - ME 90 B	P08014450C	40,00

ASH VACUUM CLEANER

	ITEM	INTERNAL COMPATIBLE	CODE	EURO
	Ash vacuum cleaner	All models	N08019040C	100,00

Prices are considered to be without sales taxes. Gruppo Piazzetta S.p.A. reserves the right to modify and/or delete all printed material, if deemed necessary by Gruppo Piazzetta without any written or prior notice.
Document reserved for the Gruppo Piazzetta S.p.A. sales organisation.

MA SL PLUS FIREBOXES WITH RISE N'FALL DOOR

Mod. MA 263 SL PLUS

CHARACTERISTICS

- Structure: enamelled steel, closed firebox
- Fire chamber: in Aluker®
- Fire grate: in cast-iron
- Hood: in steel
- Opening: door in enamelled steel with self-cleaning ceramic glass resistant up to 750C°. Rise n'fall door, hinged opening for cleaning
- Door profile: in painted steel
- Door handle: in enamelled steel
- Primary air: adjustable manually
- Secondary air: fixed
- Flue outlet: top
- Flue damper: manual
- Ash pan: removable
- Fuel: wood
- Heating: natural convection, radiant and forced ventilation kit optional through Multifuoco System® or Multifuoco System Plus, ducting
- Grille for hood, external air intake grille with remote control: standard

ACCESSORIES ON REQUEST

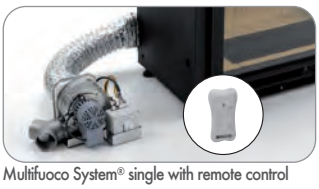

Multifuoco System® single with remote control

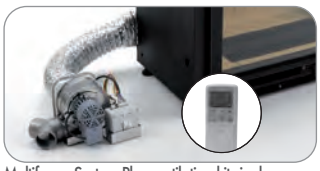

Multifuoco System Plus ventilation kit single or double with LCD remote control

Warm air distribution accessories

Grilles and air vents

Legs kit H 38cm

Leveling legs kit

Removable handles kit

Combustion air kit and accessories

Edge profile

Ash vacuum cleaner

Pipes, bends, couplings for flue pipe

Fitting and accessories for hot air ducting for natural convection

Prices are considered to be without sales taxes. Gruppo Piazzetta S.p.A. reserves the right to modify and/or delete all printed material, if deemed necessary by Gruppo Piazzetta without any written or prior notice.
Document reserved for the Gruppo Piazzetta S.p.A. sales organisation.

FIREBOXES MA SL PLUS

MA 260 SL PLUS

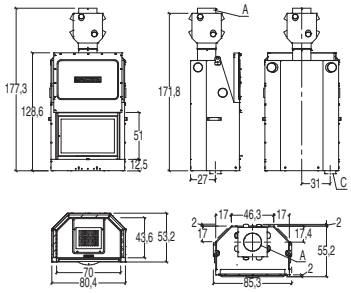

A	C
20 cm	12 cm

MA 260 SL PLUS

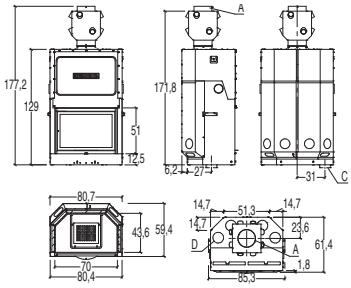

A	C	D
20 cm	12 cm	12 cm

MA 260 SL PLUS INCL. VENTILATION MANTLE KIT
(to be mounted during installation phase)

FIREBOX	DRAWING	VERSION	CODE	EURO
MA 260 SL PLUS		CLOSED	P04121910C	**2.645,00**

Model	Type	Energy efficiency class	Nominal heat output	Nominal thermal efficiency	Nominal consumption	Weight
MA 260 SL PLUS	MA260SL-01	A+	14,0 kW	87,2 %	4,0 kg/h	200 kg

ACCESSORIES ON REQUEST		
Ventilation mantle kit MA 260 SL PLUS *	P08061940C	650,00

*** Essential for the installation of the Multifuoco kit.**

Compatible surrounds		
Academy	Amburgo	Brema
City	Class	Colonia
Darwin	Dresda	Easy
Essen	Forum	Friburgo
Gallery	Life	Lipsia
Lithos	Lubecca	Paleo
Vienna	Vision	Voyager
Ways	With You	Zeus

ECO DESIGN

A+ ENERGY EFFIC. CLASS

MA 261 SL PLUS

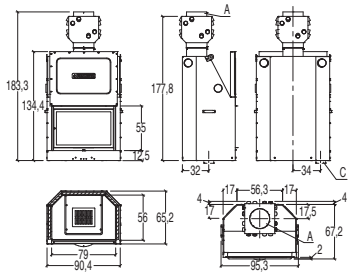

A	C
25 cm	12 cm

MA 261 SL PLUS

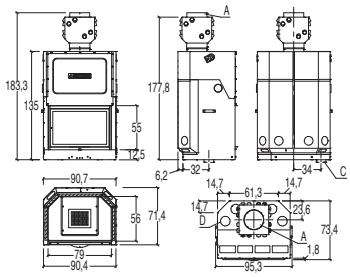

A	C	D
25 cm	12 cm	12 cm

MA 261 SL PLUS INCL. VENTILATION MANTLE KIT
(to be mounted during installation phase)

FIREBOX	DRAWING	VERSION	CODE	EURO
MA 261 SL PLUS		CLOSED	P04122910C	**3.165,00**

Model	Type	Energy efficiency class	Nominal heat output	Nominal thermal efficiency	Nominal consumption	Weight
MA 261 SL PLUS	MA261SL-02	A+	14,0 kW	85,2 %	4,0 kg/h	258 kg

ACCESSORIES ON REQUEST		
Ventilation mantle kit MA 261 SL PLUS *	P08062190C	445,00

*** Essential for the installation of the Multifuoco kit.**

Compatible surrounds	
Dresda	Easy

ECO DESIGN

A+ ENERGY EFFIC. CLASS

Prices are considered to be without sales taxes. Gruppo Piazzetta S.p.A. reserves the right to modify and/or delete all printed material, if deemed necessary by Gruppo Piazzetta without any written or prior notice.
Document reserved for the Gruppo Piazzetta S.p.A. sales organisation.

FIREBOXES MA SL PLUS

MA 262 SL PLUS

FIREBOX	DRAWING	VERSION	CODE	EURO
MA 262 SL PLUS		CLOSED	P04126910C	**3.880,00**

Model	Type	Energy efficiency class	Nominal heat output	Nominal thermal efficiency	Nominal consumption	Weight
MA 262 SL PLUS	MA262SL-01	A+	16,5 kW	81,1 %	4,8 kg/h	320 kg

ACCESSORIES ON REQUEST		
Ventilation mantle kit MA 262 SL PLUS *	P08062320C	550,00

* Essential for the installation of the Multifuoco kit.

Compatible surrounds		
Cruise	Easy	Mood

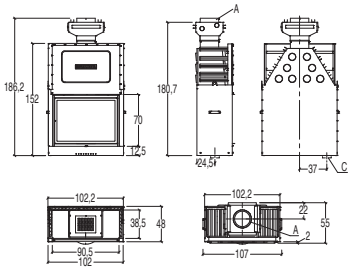

A	C
25 cm	12 cm

MA 262 SL PLUS

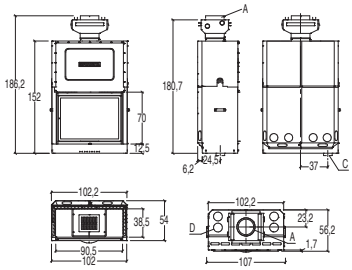

A	C	D
25 cm	12 cm	12 cm

MA 262 SL PLUS INCL. VENTILATION MANTLE KIT
(to be mounted during installation phase)

MA 263 SL PLUS

FIREBOX	DRAWING	VERSION	CODE	EURO
MA 263 SL PLUS		CLOSED	P04127910C	**3.375,00**

Model	Type	Energy efficiency class	Nominal heat output	Nominal thermal efficiency	Nominal consumption	Weight
MA 263 SL PLUS	MA263SL-01	A+	12,5 kW	86,7 %	3,6 kg/h	260 kg

ACCESSORIES ON REQUEST		
Ventilation mantle kit MA 263 SL PLUS *	P08062250C	505,00

* Essential for the installation of the Multifuoco kit.

Compatible surrounds		
Amburgo	Calais	Cambridge
Canberra	Chester	Colonia
Colorado	Columbia	Easy
Essen	Fox	Fox 1
Free	Friburgo	Graz
Kosmos	Linz	Lipsia
New Orleans	Salisburgo	San Diego
Signs		

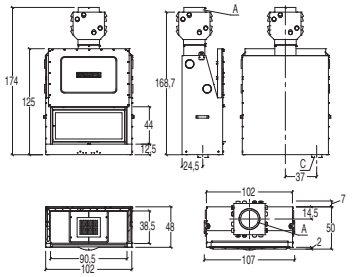

A	C
25 cm	12 cm

MA 263 SL PLUS

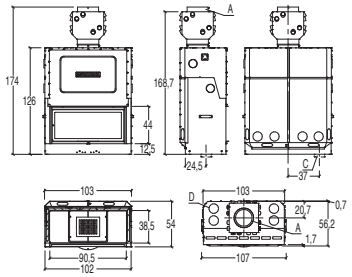

A	C	D
25 cm	12 cm	12 cm

MA 263 SL PLUS INCL. VENTILATION MANTLE KIT
(to be mounted during installation phase)

Prices are considered to be without sales taxes. Gruppo Piazzetta S.p.A. reserves the right to modify and/or delete all printed material, if deemed necessary by Gruppo Piazzetta without any written or prior notice.
Document reserved for the Gruppo Piazzetta S.p.A. sales organisation.

FIREBOXES MA SL PLUS

MA 263 B SL PLUS

FIREBOX	DRAWING	VERSION	CODE	EURO
MA 263 B SL PLUS	[ ]	CLOSED	P04151990C	**3.880,00**

Model	Type	Energy efficiency class	Nominal heat output	Nominal thermal efficiency	Nominal consumption	Weight
MA 263 B SL PLUS	MA263BSL-01	A+	13,5 kW	80,8 %	4,0 kg/h	235 kg

ACCESSORIES ON REQUEST		
Ventilation mantle kit MA 263 B SL PLUS *	P08062800C	475,00

* Essential for the installation of the Multifuoco kit.

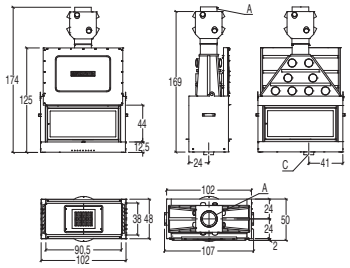

A	C
20 cm	12 cm

MA 263 B SL PLUS

Compatible surrounds

Amburgo	Calais	Cambridge
Canberra	Chester	Colonia
Colorado	Columbia	Easy
Essen	Fox	Fox 1
Free	Friburgo	Graz
Kosmos	Linz	Lipsia
New Orleans	Salisburgo	San Diego
Signs		

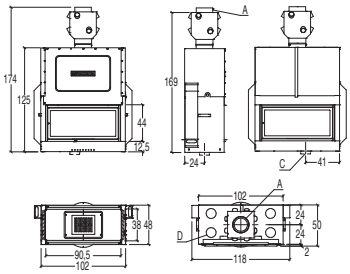

A	C	D
20 cm	12 cm	12 cm

MA 263 B SL PLUS INCL. VENTILATION MANTLE KIT
(to be mounted during installation phase)

MA 271 SL PLUS

FIREBOX	DRAWING	VERSION	CODE	EURO
MA 271 SL PLUS	[ ]	THREE GLASS ITEMS	P04129910C	**4.510,00**

Model	Type	Energy efficiency class	Nominal heat output	Nominal thermal efficiency	Nominal consumption	Weight
MA 271 SL PLUS	MA271SL-01	A	16,0 kW	77,5 %	5,2 kg/h	295 kg

ACCESSORIES ON REQUEST		
Ventilation mantle kit MA 271 SL PLUS *	P08062200C	445,00

* Essential for the installation of the Multifuoco kit.

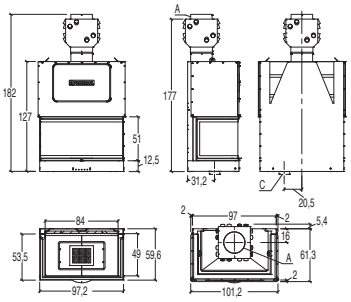

A	C
25 cm	12 cm

MA 271 SL PLUS

Compatible surrounds

Kensington

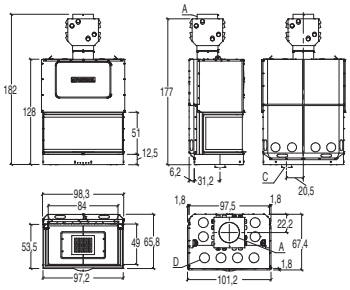

A	C	D
25 cm	12 cm	12 cm

MA 271 SL PLUS INCL. VENTILATION MANTLE KIT
(to be mounted during installation phase)

Prices are considered to be without sales taxes. Gruppo Piazzetta S.p.A. reserves the right to modify and/or delete all printed material, if deemed necessary by Gruppo Piazzetta without any written or prior notice.
Document reserved for the Gruppo Piazzetta S.p.A. sales organisation.

FIREBOXES MA SL PLUS

MA 272 SL PLUS

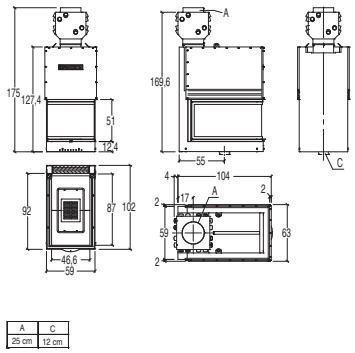

A	C
25 cm	12 cm

MA 272 SL PLUS

FIREBOX	DRAWING	VERSION	CODE	EURO
MA 272 SL PLUS		THREE GLASS ITEMS	P04130910C	**4.895,00**

Model	Type	Energy efficiency class	Nominal heat output	Nominal thermal efficiency	Nominal consumption	Weight
MA 272 SL PLUS	MA272SL-01	A	13,0 kW	78,3 %	3,9 kg/h	315 kg

Compatible surrounds

Edinburgh

ECO DESIGN

ENERGY EFFIC. CLASS

MA 283 D/S SL PLUS

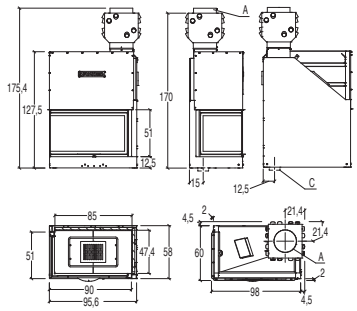

A	C
25 cm	12 cm

MA 283 D/S SL PLUS

FIREBOX	DRAWING	VERSION	CODE	EURO
MA 283 D SL PLUS		RIGHT	P04131950C	**3.890,00**
MA 283 S SL PLUS		LEFT	P04131960C	**3.890,00**

Model	Type	Energy efficiency class	Nominal heat output	Nominal thermal efficiency	Nominal consumption	Weight
MA 283 SL PLUS	MA283SL-02	A	16,0 kW	80,4 %	4,8 kg/h	270 kg

ACCESSORIES ON REQUEST		
Ventilation mantle kit MA 283 D SL PLUS *	P08062220C	475,00
Ventilation mantle kit MA 283 S SL PLUS *	P08062230C	475,00

* Essential for the installation of the Multifuoco kit.

Compatible surrounds

—

ECO DESIGN

ENERGY EFFIC. CLASS

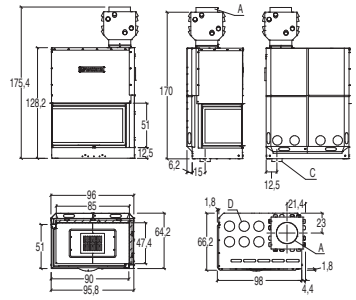

A	C	D
25 cm	12 cm	12 cm

MA 283 D/S SL PLUS INCL. VENTILATION MANTLE KIT
(to be mounted during installation phase)

Prices are considered to be without sales taxes. Gruppo Piazzetta S.p.A. reserves the right to modify and/or delete all printed material, if deemed necessary by Gruppo Piazzetta without any written or prior notice.
Document reserved for the Gruppo Piazzetta S.p.A. sales organisation.

FIREBOXES MA SL PLUS

MA 285 D/S SL PLUS

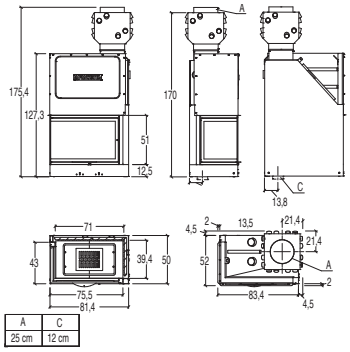

MA 285 D/S SL PLUS

FIREBOX	DRAWING	VERSION	CODE	EURO
MA 285 D SL PLUS		RIGHT	P04135950C	**3.440,00**
MA 285 S SL PLUS		LEFT	P04135960C	**3.440,00**

Model	Type	Energy efficiency class	Nominal heat output	Nominal thermal efficiency	Nominal consumption	Weight
MA 285 SL PLUS	MA285SL-01	A	13,0 kW	80,3 %	4,0 kg/h	215 kg

ACCESSORIES ON REQUEST		
Ventilation mantle kit MA 285 D SL PLUS *	P08062130C	445,00
Ventilation mantle kit MA 285 S SL PLUS *	P08062140C	445,00

*** Essential for the installation of the Multifuoco kit.**

Compatible surrounds	
Bristol with bench	Bristol without bench

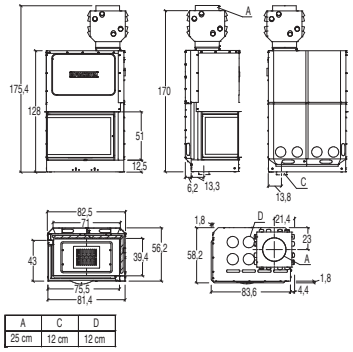

MA 285 D/S SL PLUS INCL. VENTILATION MANTLE KIT
(to be mounted during installation phase)

ECO DESIGN

ENERGY EFFIC. CLASS

Prices are considered to be without sales taxes. Gruppo Piazzetta S.p.A. reserves the right to modify and/or delete all printed material, if deemed necessary by Gruppo Piazzetta without any written or prior notice.
Document reserved for the Gruppo Piazzetta S.p.A. sales organisation.

FIREBOXES MA SL PLUS

Accessories

MULTIFUOCO SYSTEM®

	ITEM	INTERNAL COMPATIBLE	CODE	EURO
	Multifuoco System® single	MA 260 SL PLUS, MA 261 SL PLUS MA 262 SL PLUS, MA 263 SL PLUS MA 263 B SL PLUS MA 271 SL PLUS, MA 283 D/S SL PLUS MA 285 D/S SL PLUS	P08027530C	650,00

MULTIFUOCO SYSTEM PLUS

	ITEM	INTERNAL COMPATIBLE	CODE	EURO
	Multifuoco System Plus single	MA 260 SL PLUS, MA 261 SL PLUS MA 262 SL PLUS, MA 263 SL PLUS MA 263 B SL PLUS MA 271 SL PLUS, MA 283 D/S SL PLUS MA 285 D/S SL PLUS	P08027550C	835,00
	Multifuoco System Plus double	MA 260 SL PLUS, MA 261 SL PLUS MA 262 SL PLUS, MA 263 SL PLUS MA 263 B SL PLUS MA 271 SL PLUS, MA 283 D/S SL PLUS MA 285 D/S SL PLUS	P08027560C	1.115,00

VENTILATION MANTLE KIT

	ITEM	INTERNAL COMPATIBLE	CODE	EURO
	Ventilation mantle kit	MA 260 SL PLUS	P08061940C	650,00
		MA 261 SL PLUS	P08062190C	445,00
		MA 262 SL PLUS	P08062320C	550,00
		MA 263 SL PLUS	P08062250C	505,00
		MA 263 B SL PLUS	P08062800C	475,00
		MA 271 SL PLUS	P08062200C	445,00
		MA 283 D SL PLUS	P08062220C	475,00
		MA 283 S SL PLUS	P08062230C	475,00
		MA 285 D SL PLUS	P08062130C	445,00
		MA 285 S SL PLUS	P08062140C	445,00

FEET KIT

	ITEM	INTERNAL COMPATIBLE	CODE	EURO
	Legs kit H 38cm	All models	P08014360C	175,00
	Leveling legs kit H 2-3 cm	All models	P08017890C	25,00

COMBUSTION AIR KIT

	ITEM	INTERNAL COMPATIBLE	CODE	EURO
	Combustion air kit composed of collar, clamp and 3 metres of 12 cm Ø hose	All models	P08017410C	90,00
	Ø 12 cm pipe for air connection (3 metre pack)	All models	P08010360	30,00 per pack (3 metres)

Prices are considered to be without sales taxes. Gruppo Piazzetta S.p.A. reserves the right to modify and/or delete all printed material, if deemed necessary by Gruppo Piazzetta without any written or prior notice.
Document reserved for the Gruppo Piazzetta S.p.A. sales organisation.

FIREBOXES MA SL PLUS

Accessories

NATURAL CONVECTION ACCESSORIES

	ITEM	INTERNAL COMPATIBLE	CODE	EURO
	Hot air Ø 12 cm pipe union, collar for the connection to the firebox shell	All models with ventilation mantle kit	P08010630	7,00
	Ø 12 cm pipe for air connection (3 metre pack)	All models	P08010360	30,00 per pack (3 metres)
	Closing kit for natural convection	All models	P08062730C	20,00

EDGE PROFILE

	ITEM	INTERNAL COMPATIBLE	CODE	EURO
	Black-painted steel edge profile, for masonry finishes	MA 260 SL PLUS	P08013410C	370,00
		MA 261 SL PLUS	P08013420C	370,00
		MA 262 SL PLUS	P08013460C	370,00
		MA 263 SL PLUS, MA 263 B SL PLUS	P08013450C	370,00
		MA 271 SL PLUS	P08016120C	445,00
		MA 272 SL PLUS	P08016110C	445,00
		MA 283 D SL PLUS	P08016140C	405,00
		MA 283 S SL PLUS	P08016130C	405,00
		MA 285 D SL PLUS	P08016900C	405,00
		MA 285 S SL PLUS	P08016910C	405,00

ASH VACUUM CLEANER

	ITEM	INTERNAL COMPATIBLE	CODE	EURO
	Ash vacuum cleaner	All models	N08019040C	100,00

Prices are considered to be without sales taxes. Gruppo Piazzetta S.p.A. reserves the right to modify and/or delete all printed material, if deemed necessary by Gruppo Piazzetta without any written or prior notice.
Document reserved for the Gruppo Piazzetta S.p.A. sales organisation.

MA SL FIREBOXES WITH RISE N'FALL DOOR

Mod. MA 264 SL

CHARACTERISTICS

- Structure: enamelled steel, closed firebox
- Fire chamber: in Aluker®
- Fire grate: in cast-iron
- Hood: in steel
- Opening: door in enamelled steel with self-cleaning ceramic glass resistant up to 750C°. Rise n'fall door, hinged opening for cleaning
- Door profile: in painted steel
- Door handle: in enamelled steel
- Primary air: adjustable manually
- Secondary air: fixed
- Flue outlet: top
- Flue damper: manual
- Ash pan: removable
- Fuel: wood
- Heating: radiant and natural convection
- Grille for hood, external air intake grille with remote control: standard

ACCESSORIES ON REQUEST

Legs kit H 38cm

Leveling legs kit

Removable handles kit

Hob

Log retainer

Stainless steel grill

Combustion air kit and accessories

Edge profile

Ash vacuum cleaner

Pipes, bends, couplings for flue pipe

Prices are considered to be without sales taxes. Gruppo Piazzetta S.p.A. reserves the right to modify and/or delete all printed material, if deemed necessary by Gruppo Piazzetta without any written or prior notice.
Document reserved for the Gruppo Piazzetta S.p.A. sales organisation.

FIREBOXES MA SL

MA 260 SL

FIREBOX	DRAWING	VERSION	CODE	EURO
MA 260 SL		CLOSED	P04121510C	**2.320,00**

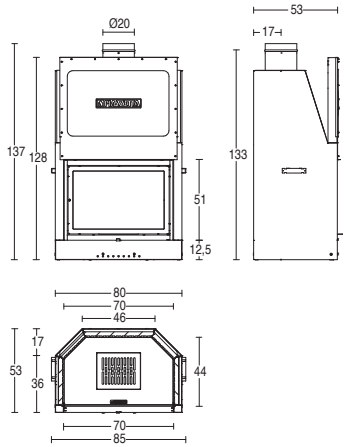

Model	Type	Energy efficiency class	Nominal heat output	Nominal thermal efficiency	Nominal consumption	Weight
MA 260 SL	MA260SL-02	A+	13,5 kW	83,5 %	3,9 kg/h	157 kg

Compatible surrounds		
Academy	Amburgo	Brema
City	Class	Colonia
Darwin	Dresda	Easy
Essen	Forum	Friburgo
Gallery	Life	Lipsia
Lithos	Lubecca	Paleo
Vienna	Vision	Voyager
Ways	With You	Zeus

ECO DESIGN

A+ ENERGY EFFIC. CLASS

Ecodesign Version.

MA 260 SL

FIREBOX	DRAWING	VERSION	CODE	EURO
MA 260 SL		CLOSED	P04121010C	**2.115,00**

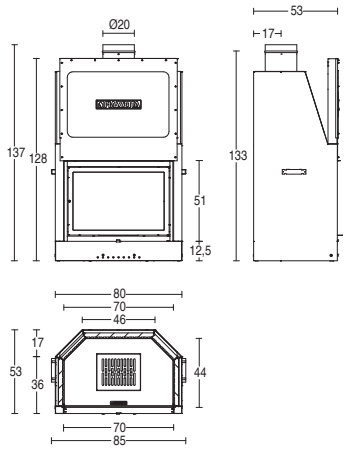

Model	Type	Energy efficiency class	Nominal heat output	Nominal thermal efficiency	Nominal consumption	Weight
MA 260 SL	MA 260 SL	A	12,5 kW	75,5 %	3,6 kg/h	157 kg

Compatible surrounds		
Academy	Amburgo	Brema
City	Class	Colonia
Darwin	Dresda	Easy
Essen	Forum	Friburgo
Gallery	Life	Lipsia
Lithos	Lubecca	Paleo
Vienna	Vision	Voyager
Ways	With You	Zeus

A ENERGY EFFIC. CLASS

Version not certified according to Ecodesign 2022 regulation. Available while stocks last.

MA 260 B SL

FIREBOX	DRAWING	VERSION	CODE	EURO
MA 260 B SL		DOUBLE-SIDED	P04150090C	**2.740,00**

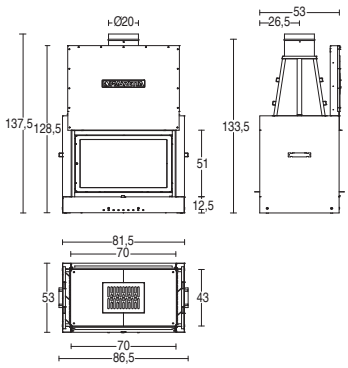

Model	Type	Energy efficiency class	Nominal heat output	Nominal thermal efficiency	Nominal consumption	Weight
MA 260 B SL	MA 260 B SL	A	13,5 kW	75,0 %	4,2 kg/h	180 kg

Compatible surrounds		
Academy	Amburgo	Brema
City	Class	Colonia
Darwin	Dresda	Easy
Essen	Forum	Friburgo
Gallery	Life	Lipsia
Lithos	Lubecca	Paleo
Vienna	Vision	Voyager
Ways	With You	Zeus

A ENERGY EFFIC. CLASS

Version not certified according to Ecodesign 2022 regulation. Available while stocks last.

Prices are considered to be without sales taxes. Gruppo Piazzetta S.p.A. reserves the right to modify and/or delete all printed material, if deemed necessary by Gruppo Piazzetta without any written or prior notice.
Document reserved for the Gruppo Piazzetta S.p.A. sales organisation.

FIREBOXES MA SL

MA 261 SL

FIREBOX	DRAWING	VERSION	CODE	EURO
MA 261 SL		CLOSED	P04122510C	**2.595,00**

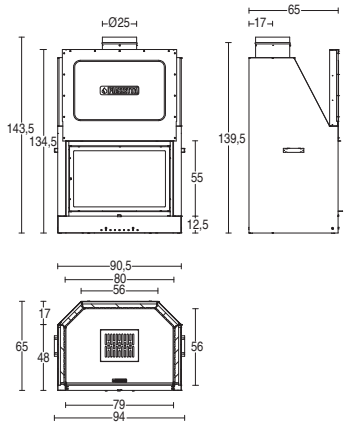

Model	Type	Energy efficiency class	Nominal heat output	Nominal thermal efficiency	Nominal consumption	Weight
MA 261 SL	MA 261SL-03	A+	16,0 kW	81,5 %	4,8 kg/h	206 kg

Compatible surrounds	
Dresda	Easy

ECO DESIGN

A+ ENERGY EFFIC. CLASS

Ecodesign Version.

MA 261 SL

FIREBOX	DRAWING	VERSION	CODE	EURO
MA 261 SL		CLOSED	P04122010C	**2.360,00**

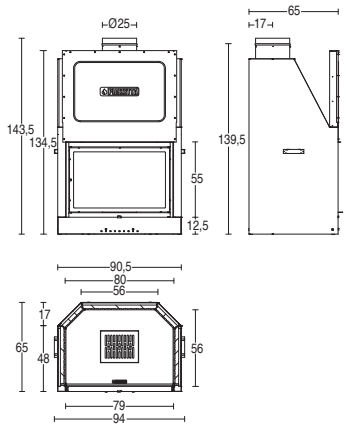

Model	Type	Energy efficiency class	Nominal heat output	Nominal thermal efficiency	Nominal consumption	Weight
MA 261 SL	MA261SL-01	A	13,5 kW	77,8 %	4,0 kg/h	206 kg

Compatible surrounds	
Dresda	Easy

A ENERGY EFFIC. CLASS

Version not certified according to Ecodesign 2022 regulation. Available while stocks last.

MA 262 SL

FIREBOX	DRAWING	VERSION	CODE	EURO
MA 262 SL		CLOSED	P04126510C	**3.815,00**

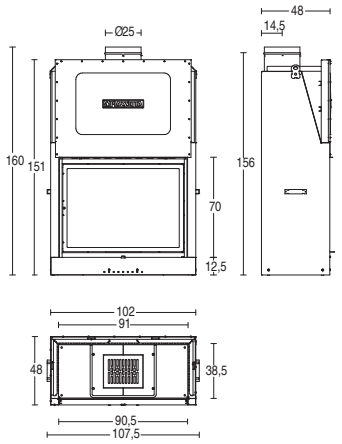

Model	Type	Energy efficiency class	Nominal heat output	Nominal thermal efficiency	Nominal consumption	Weight
MA 262 SL	MA262SL-02	A	17,5 kW	80,5 %	5,3 kg/h	265 kg

Compatible surrounds		
Cruise	Easy	Mood

ECO DESIGN

A ENERGY EFFIC. CLASS

Ecodesign Version.

Prices are considered to be without sales taxes. Gruppo Piazzetta S.p.A. reserves the right to modify and/or delete all printed material, if deemed necessary by Gruppo Piazzetta without any written or prior notice.
Document reserved for the Gruppo Piazzetta S.p.A. sales organisation.

FIREBOXES MA SL

MA 262 SL

FIREBOX	DRAWING	VERSION	CODE	EURO
MA 262 SL		CLOSED	P04126010C	**2.650,00**

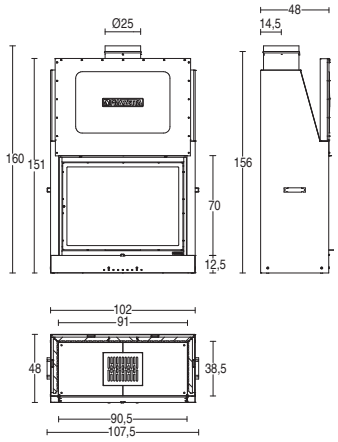

Model	Type	Energy efficiency class	Nominal heat output	Nominal thermal efficiency	Nominal consumption	Weight
MA 262 SL	MA 262 SL	A	13,0 kW	75,0 %	3,9 kg/h	235 kg

Compatible surrounds		
Cruise	Easy	Mood

A
ENERGY EFFIC. CLASS

Version not certified according to Ecodesign 2022 regulation. Available while stocks last.

MA 263 SL

FIREBOX	DRAWING	VERSION	CODE	EURO
MA 263 SL		CLOSED	P04127510C	**2.575,00**

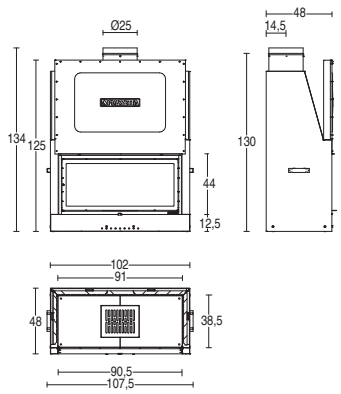

Model	Type	Energy efficiency class	Nominal heat output	Nominal thermal efficiency	Nominal consumption	Weight
MA 263 SL	MA263SL-02	A+	13,0 kW	83,2 %	3,8 kg/h	205 kg

Compatible surrounds		
Amburgo	Calais	Cambridge
Canberra	Chester	Colonia
Colorado	Columbia	Easy
Essen	Fox	Fox 1
Free	Friburgo	Graz
Kosmos	Linz	Lipsia
New Orleans	Salisburgo	San Diego
Signs		

ECO DESIGN

A+
ENERGY EFFIC. CLASS

Ecodesign Version.

MA 263 SL

FIREBOX	DRAWING	VERSION	CODE	EURO
MA 263 SL		CLOSED	P04127010C	**2.350,00**

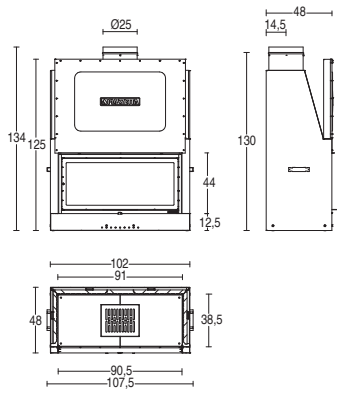

Model	Type	Energy efficiency class	Nominal heat output	Nominal thermal efficiency	Nominal consumption	Weight
MA 263 SL	MA 263 SL	A	13,0 kW	75,0 %	3,9 kg/h	205 kg

Compatible surrounds		
Amburgo	Calais	Cambridge
Canberra	Chester	Colonia
Colorado	Columbia	Easy
Essen	Fox	Fox 1
Free	Friburgo	Graz
Kosmos	Linz	Lipsia
New Orleans	Salisburgo	San Diego
Signs		

A
ENERGY EFFIC. CLASS

Version not certified according to Ecodesign 2022 regulation. Available while stocks last.

Prices are considered to be without sales taxes. Gruppo Piazzetta S.p.A. reserves the right to modify and/or delete all printed material, if deemed necessary by Gruppo Piazzetta without any written or prior notice.
Document reserved for the Gruppo Piazzetta S.p.A. sales organisation.

FIREBOXES MA SL

MA 264 SL

FIREBOX	DRAWING	VERSION	CODE	EURO
MA 264 SL		CLOSED	P04125010C	**2.760,00**

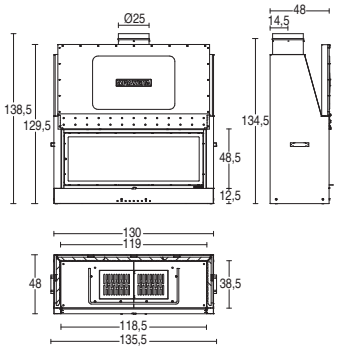

Model	Type	Energy efficiency class	Nominal heat output	Nominal thermal efficiency	Nominal consumption	Weight
MA 264 SL	MA 264 SL	A	14,5 kW	76,0 %	4,4 kg/h	263 kg

Compatible surrounds

Amburgo	Archeo	Capital
Colonia	Easy	Eos
Essen	Friburgo	Graz
Linz	Lipsia	Philadelphia
Phoenix	Salisburgo	Sun
Surface	Village	

A
ENERGY EFFIC. CLASS

Version not certified according to Ecodesign 2022 regulation. Available while stocks last.

MA 265 SL

FIREBOX	DRAWING	VERSION	CODE	EURO
MA 265 SL		CLOSED	P04128010C	**3.670,00**

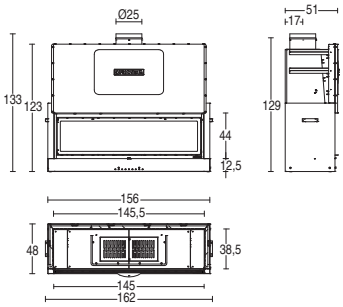

Model	Type	Energy efficiency class	Nominal heat output	Nominal thermal efficiency	Nominal consumption	Weight
MA 265 SL	MA 265 SL	A	15,5 kW	75,0 %	4,8 kg/h	341 kg

Compatible surrounds

Sheffield

A
ENERGY EFFIC. CLASS

Version not certified according to Ecodesign 2022 regulation. Available while stocks last.

MA 271 SL

FIREBOX	DRAWING	VERSION	CODE	EURO
MA 271 SL		THREE GLASS ITEMS	P04129010C	**4.085,00**

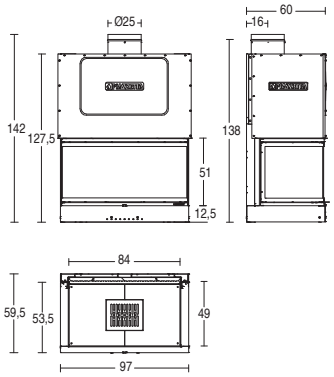

Model	Type	Energy efficiency class	Nominal heat output	Nominal thermal efficiency	Nominal consumption	Weight
MA 271 SL	MA 271 SL	C	13,4 kW	63,0 %	4,8 kg/h	265 kg

Compatible surrounds

Kensington

C
ENERGY EFFIC. CLASS

Version not certified according to Ecodesign 2022 regulation. Available while stocks last.

Prices are considered to be without sales taxes. Gruppo Piazzetta S.p.A. reserves the right to modify and/or delete all printed material, if deemed necessary by Gruppo Piazzetta without any written or prior notice.
Document reserved for the Gruppo Piazzetta S.p.A. sales organisation.

FIREBOXES MA SL

MA 272 SL

FIREBOX	DRAWING	VERSION	CODE	EURO
MA 272 SL		THREE GLASS ITEMS	P04130010C	**4.255,00**

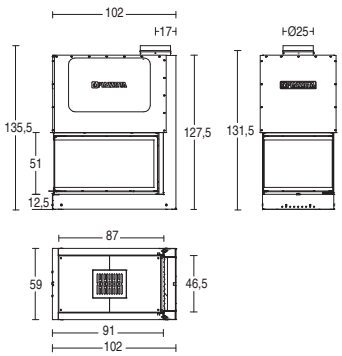

Model	Type	Energy efficiency class	Nominal heat output	Nominal thermal efficiency	Nominal consumption	Weight
MA 272 SL	MA 272 SL	C	14,5 kW	63,0 %	5,3 kg/h	295 kg

Compatible surrounds

Edinburgh

C
ENERGY EFFIC. CLASS

Version not certified according to Ecodesign 2022 regulation. Available while stocks last.

MA 283 D/S SL

FIREBOX	DRAWING	VERSION	CODE	EURO
MA 283 D SL		RIGHT	P04131050C	**3.035,00**
MA 283 S SL		LEFT	P04131060C	**3.035,00**

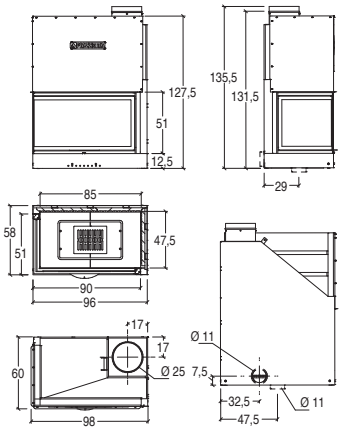

Model	Type	Energy efficiency class	Nominal heat output	Nominal thermal efficiency	Nominal consumption	Weight
MA 283 DX SL MA 283 SX SL	MA283SL-01	A	13,5 kW	75,0 %	4,1 kg/h	185 kg

Compatible surrounds

-

ECO DESIGN

A
ENERGY EFFIC. CLASS

Ecodesign Version.

MA 285 D/S SL

FIREBOX	DRAWING	VERSION	CODE	EURO
MA 285 D SL		RIGHT	P04135050C	**2.835,00**
MA 285 S SL		LEFT	P04135060C	**2.835,00**

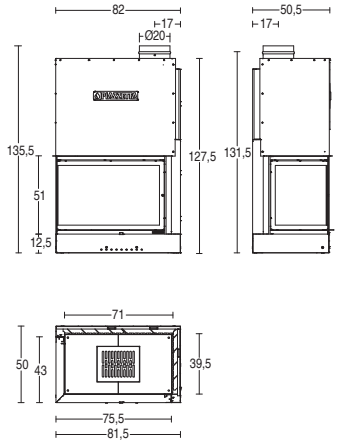

Model	Type	Energy efficiency class	Nominal heat output	Nominal thermal efficiency	Nominal consumption	Weight
MA 285 SL	MA 285 SL	A	12,5 kW	72,5 %	4,1 kg/h	185 kg

Compatible surrounds

Bristol with bench Bristol without bench

A
ENERGY EFFIC. CLASS

Version not certified according to Ecodesign 2022 regulation. Available while stocks last.

Prices are considered to be without sales taxes. Gruppo Piazzetta S.p.A. reserves the right to modify and/or delete all printed material, if deemed necessary by Gruppo Piazzetta without any written or prior notice.
Document reserved for the Gruppo Piazzetta S.p.A. sales organisation.

FIREBOXES MA SL

Accessories

WOOD BRAZIER AND GRILL

	ITEM	INTERNAL COMPATIBLE	CODE	EURO
	Log retainer L 42 x D 18 cm	MA 260 SL	S08020210C	80,00
	Log retainer W 52 x D 18 cm	MA 261 SL	S08020220C	100,00
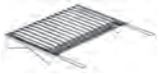	Stainless grill with anti- drip pan W 50 x D 32 cm	MA 260 SL	S08020230C	120,00
	Stainless grill with anti- drip pan W 50 x D 38 cm	MA 261 SL	S08020240C	120,00

HOBS

	ITEM	INTERNAL COMPATIBLE	CODE	EURO
	Hob in Aluker®	MA 260 SL	P08011480C	125,00
		MA 261 SL	P08011490C	180,00

FEET KIT

	ITEM	INTERNAL COMPATIBLE	CODE	EURO
	Legs kit H 38cm	All models	P08014360C	175,00
	Leveling legs kit H 2-3 cm	All models	P08017890C	25,00

COMBUSTION AIR KIT

	ITEM	INTERNAL COMPATIBLE	CODE	EURO
	Combustion air kit composed of collar, clamp and 3 metres of 12 cm Ø hose	All models	P08017410C	90,00
	Ø 12 cm pipe for air connection (3 metre pack)	All models	P08010360	30,00 per pack (3 metres)

ACCESSORIES FOR INSTALLATION

	ITEM	INTERNAL COMPATIBLE	CODE	EURO
	Handles kit	For front models only	P08014450C	40,00

ASH VACUUM CLEANER

	ITEM	INTERNAL COMPATIBLE	CODE	EURO
	Ash vacuum cleaner	All models	N08019040C	100,00

EDGE PROFILE

	ITEM	INTERNAL COMPATIBLE	CODE	EURO
	Black-painted steel edge profile, for masonry finishes	MA 260 SL, MA 260 B SL	P08013410C	370,00
		MA 263 SL	P08013450C	370,00
		MA 262 SL	P08013460C	370,00
		MA 261 SL	P08013420C	370,00
		MA 264 SL	P08013470C	370,00
		MA 265 SL	P08014870C	370,00
		MA 266 SL	P08016860C	370,00
		MA 271 SL	P08016120C	445,00
		MA 272 SL	P08016110C	445,00
		MA 283 SL DX	P08016140C	405,00
		MA 283 SL SX	P08016130C	405,00
		MA 285 SL DX	P08016900C	405,00
		MA 285 SL SX	P08016910C	405,00

Prices are considered to be without sales taxes. Gruppo Piazzetta S.p.A. reserves the right to modify and/or delete all printed material, if deemed necessary by Gruppo Piazzetta without any written or prior notice.
Document reserved for the Gruppo Piazzetta S.p.A. sales organisation.

WOOD-BURNING OVENS AND STOVES

Mod. CHEF 102

TRADITIONAL WOOD OVEN

CHEF 72 - CHEF 102

Wood oven for direct heat cooking. Oven made in refractory material with double air chamber at the top for greater heat recovery, it has a large ceramic glass door and an thermometer inside. Equipped with a manually adjustable damper.

Prices are considered to be without sales taxes. Gruppo Piazzetta S.p.A. reserves the right to modify and/or delete all printed material, if deemed necessary by Gruppo Piazzetta without any written or prior notice.
Document reserved for the Gruppo Piazzetta S.p.A. sales organisation.

COOKING

CHEF 72

FIREBOX	DRAWING	VERSION	CHARACTERISTICS	CODE	EURO
CHEF 72		CLOSED	Depth 72 cm	P09200130C	**1.455,00**

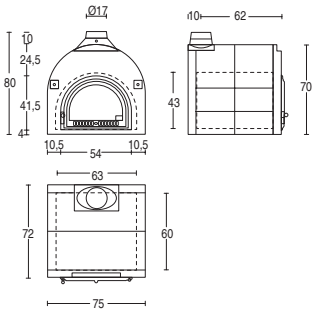

Weight
300 kg

Compatible surrounds
-

CHEF 102

FIREBOX	DRAWING	VERSION	CHARACTERISTICS	CODE	EURO
CHEF 102		CLOSED	Depth 102 cm	P09200140C	**1.620,00**

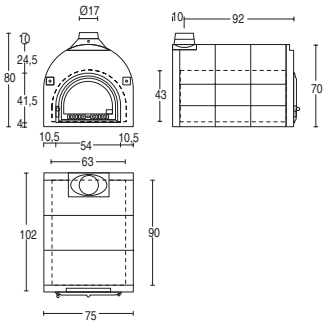

Weight
400 kg

Compatible surrounds
-

Prices are considered to be without sales taxes. Gruppo Piazzetta S.p.A. reserves the right to modify and/or delete all printed material, if deemed necessary by Gruppo Piazzetta without any written or prior notice.
Document reserved for the Gruppo Piazzetta S.p.A. sales organisation.

IL WOOD-BURNING INSERTS

Mod. IL 75/64

CHARACTERISTICS

- Structure: enamelled steel, closed firebox
- Firebox: airtight on model E928 Hermetic BCS
- Burn Control System: model E928 Hermetic BCS
- Heat Storage System: for series E928 WF, optional
- Fire chamber: in Aluker®
- Fire grate: in cast-iron
- Opening: enamelled steel door with self-cleaning ceramic glass resistant up to 750°C. Hinged door
- Door handle: in steel, hidden detachable (mod. IL) - silicon covered handle on other models
- Primary air: adjustable manually - electronically controlled in the BCS version
- Secondary air: adjustable manually - electronically controlled in the BCS version
- Tertiary air: fixed and preheated (mod. IL and mod. WF)
- Flue outlet: top - top/rear (mod. WF)
- Flue damper: adjustable and automatic (mod. IL)
- Ash pan: removable
- Combustion air kit: for series E928 WF, optional
- Fuel: wood
- Heating: natural convection and radiant, forced ventilation standard according to the models, forced ventilation with Multifuoco System® or Multifuoco System Plus optional according to the models

ACCESSORIES ON REQUEST

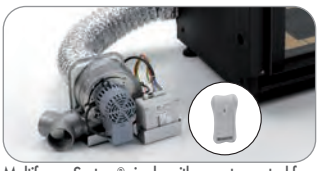

Multifuoco System® single with remote control for IL52/57 models

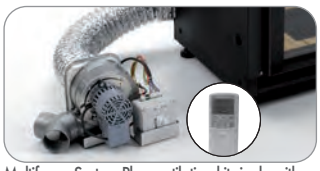

Multifuoco System Plus ventilation kit single with LCD remote control for IL52/57 models

Multifuoco System® single with remote control for E928 WF model

Multifuoco System Plus ventilation kit single with LCD remote control for E928 WF and E928 WF Hermetic BCS models

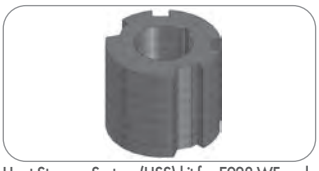

Heat Storage System (HSS) kit for E928 WF and E928 WF Hermetic BCS models

Fitting and accessories for hot air ducting for natural convection

Removable handles kit

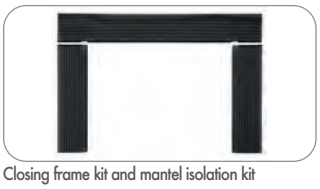

Closing frame kit and mantel isolation kit

Flange

Edge profile

Ash vacuum cleaner

Prices are considered to be without sales taxes. Gruppo Piazzetta S.p.A. reserves the right to modify and/or delete all printed material, if deemed necessary by Gruppo Piazzetta without any written or prior notice.
Document reserved for the Gruppo Piazzetta S.p.A. sales organisation.

INSERTS IL

IL 52/57 M

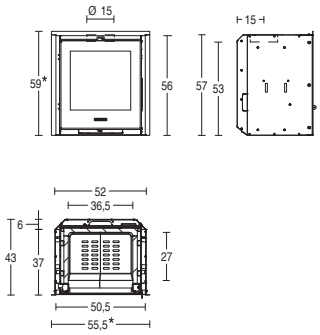

* The measures include the profile

FIREBOX	DRAWING	VERSION	CODE	EURO
IL 52/57 M		CLOSED	P02552000C	**2.185,00**

Model	Type	Energy efficiency class	Nominal heat output	Nominal thermal efficiency	Nominal consumption	Weight
IL 52/57	SL320-02	A	9,0 kW	80,5 %	2,7 kg/h	96 kg

Compatible surrounds
Easy

ECO DESIGN
ENERGY EFFIC. CLASS

IL 65/49

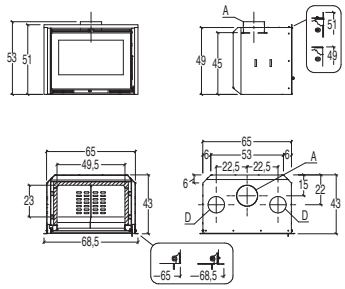

A	D
15 cm	12 cm

FIREBOX	DRAWING	VERSION	CODE	EURO
IL 65/49		CLOSED	P02565010C	**2.000,00**

Model	Type	Energy efficiency class	Nominal heat output	Nominal thermal efficiency	Nominal consumption	Weight
IL 65/49	IL 65/49	A	7,0 kW	80,1 %	1,9 kg/h	105 kg

Compatible surrounds
-

ECO DESIGN
ENERGY EFFIC. CLASS

IL 65/54

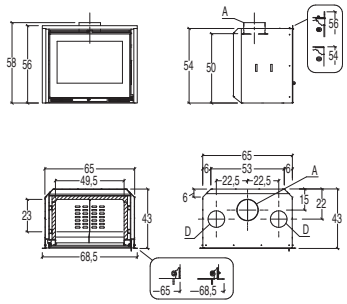

A	D
15 cm	12 cm

FIREBOX	DRAWING	VERSION	CODE	EURO
IL 65/54		CLOSED	P02565000C	**2.080,00**

Model	Type	Energy efficiency class	Nominal heat output	Nominal thermal efficiency	Nominal consumption	Weight
IL 65/54	IL 65/54	A	7,0 kW	78,1 %	2,0 kg/h	110 kg

Compatible surrounds
-

ECO DESIGN
ENERGY EFFIC. CLASS

IL 65/56 V

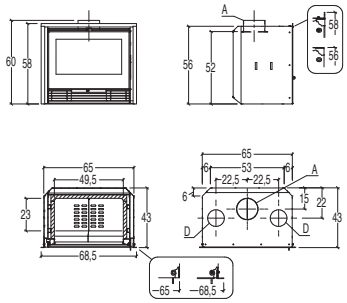

A	D
15 cm	12 cm

FIREBOX	DRAWING	VERSION	CODE	EURO
IL 65/56 V		CLOSED	P02565020C	**2.440,00**

Model	Type	Energy efficiency class	Nominal heat output	Nominal thermal efficiency	Nominal consumption	Weight
IL 65/56 V	IL 65/56 V	A	7,0 kW	80,0 %	1,9 kg/h	120 kg

Compatible surrounds
-

ECO DESIGN
ENERGY EFFIC. CLASS

Prices are considered to be without sales taxes. Gruppo Piazzetta S.p.A. reserves the right to modify and/or delete all printed material, if deemed necessary by Gruppo Piazzetta without any written or prior notice.
Document reserved for the Gruppo Piazzetta S.p.A. sales organisation.

INSERTS IL

IL 75/58

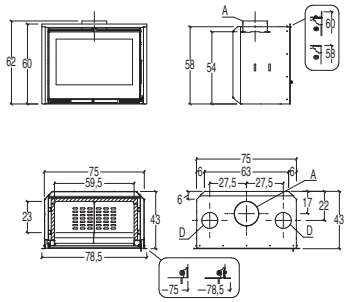

A	D
18 cm	12 cm

FIREBOX	DRAWING	VERSION	CODE	EURO
IL 75/58		CLOSED	P02575000C	**2.280,00**

Model	Type	Energy efficiency class	Nominal heat output	Nominal thermal efficiency	Nominal consumption	Weight
IL 75/58	IL 75/58	A	9,0 kW	80,0 %	2,4 kg/h	125 kg

Compatible surrounds

-

ECO DESIGN

ENERGY EFFIC. CLASS

IL 75/64

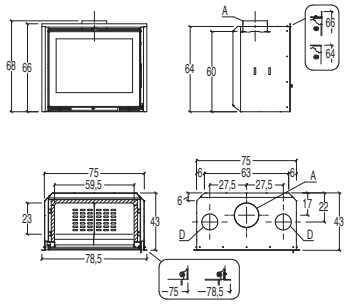

A	D
18 cm	12 cm

FIREBOX	DRAWING	VERSION	CODE	EURO
IL 75/64		CLOSED	P02575010C	**2.385,00**

Model	Type	Energy efficiency class	Nominal heat output	Nominal thermal efficiency	Nominal consumption	Weight
IL 75/64	IL 75/64	A	9,0 kW	79,7 %	2,4 kg/h	132 kg

Compatible surrounds

-

ECO DESIGN

ENERGY EFFIC. CLASS

IL 75/66 V

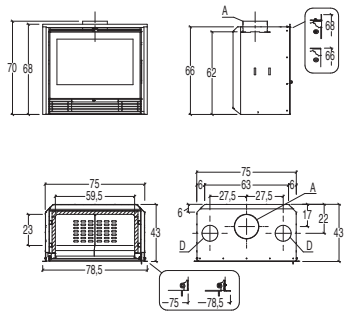

A	D
18 cm	12 cm

FIREBOX	DRAWING	VERSION	CODE	EURO
IL 75/66 V		CLOSED	P02575020C	**2.570,00**

Model	Type	Energy efficiency class	Nominal heat output	Nominal thermal efficiency	Nominal consumption	Weight
IL 75/66 V	IL 75/66 V	A	9,0 kW	80,0 %	2,4 kg/h	147 kg

Compatible surrounds

-

ECO DESIGN

ENERGY EFFIC. CLASS

Prices are considered to be without sales taxes. Gruppo Piazzetta S.p.A. reserves the right to modify and/or delete all printed material, if deemed necessary by Gruppo Piazzetta without any written or prior notice.
Document reserved for the Gruppo Piazzetta S.p.A. sales organisation.

INSERTS WF

E928 WF

FIREBOX	DRAWING	VERSION	CODE	EURO
E928 WF		CLOSED	P07928500C	**2.910,00**

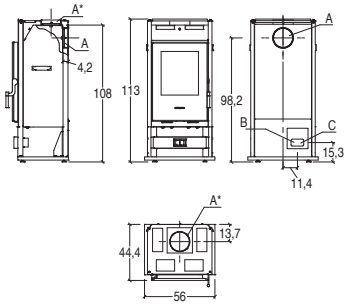

A	B	C
15 cm	7,5 cm	12 cm

Model	Type	Energy efficiency class	Nominal heat output (min - max)	Nominal thermal efficiency (min - max)	Nominal consumption (min - max)	Weight
E928 WF	SL31-01	A+	5,5-11 kW	83,1-86,0 %	1,5-2,9 kg/h	165 kg

Compatible surrounds

Hobart

ECO DESIGN

ENERGY EFFIC. CLASS

E928 WF Hermetic BCS

FIREBOX	DRAWING	VERSION	CODE	EURO
E928 WF Hermetic BCS		CLOSED	P07928600C	**3.955,00**

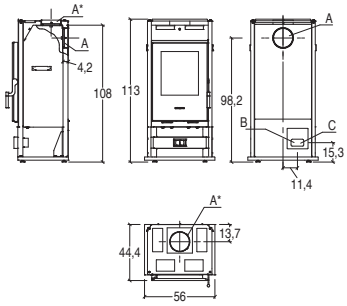

A	B	C
15 cm	7,5 cm	12 cm

Model	Type	Energy efficiency class	Nominal heat output (min - max)	Nominal thermal efficiency (min - max)	Nominal consumption (min - max)	Weight
E928 WF BCS	SL32-01	A+	5,5-11,1 kW	84,8-86,6 %	1,4-2,9 kg/h	175 kg

Compatible surrounds

Hobart

ECO DESIGN

ENERGY EFFIC. CLASS

Prices are considered to be without sales taxes. Gruppo Piazzetta S.p.A. reserves the right to modify and/or delete all printed material, if deemed necessary by Gruppo Piazzetta without any written or prior notice.
Document reserved for the Gruppo Piazzetta S.p.A. sales organisation.

INSERTS IL - INSERTS WF

Accessories

MULTIFUOCO SYSTEM®

	ITEM	INTERNAL COMPATIBLE	CODE	EURO
	Multifuoco System® single	IL 52/57 M	P08020340C	650,00
		E928 WF	P08020410C	725,00

MULTIFUOCO SYSTEM PLUS

	ITEM	INTERNAL COMPATIBLE	CODE	EURO
	Multifuoco System Plus single	IL 52/57 M	P08020420C	835,00
		E928 WF	P08020500C	895,00
		E928 WF Hermetic BCS	P08020700C	455,00

FILLING FLANGE

	ITEM	INTERNAL COMPATIBLE	CODE	EURO
	Steel filling flange Ø 18 cm 25 x 35 cm	IL 75/58 - IL 75/64 - IL 75/66 V	P08021840C	34,00
	Steel filling flange Ø 15 cm 25 x 35 cm	IL 65/49 - IL 65/54 - IL 65/56 V	P08021380C	34,00
	Steel filling flange Ø 18 cm 40 x 80 cm	IL 75/58 - IL 75/64 - IL 75/66 V	P08021850C	39,00
	Steel filling flange Ø 15 cm 40 x 80 cm	IL 65/49 - IL 65/54 - IL 65/56 V	P08021440C	39,00

FRAME KIT

	ITEM	INTERNAL COMPATIBLE	CODE	EURO
	Front closing frame kit - W x H 93.5 x 63 cm	IL 65/49	P08014420C	100,00
	Front closing frame kit - W x H 93.5 x 68 cm	IL 65/54	P08014400C	100,00
	Front closing frame kit - W x H 103.5 x 72 cm	IL 75/58	P08014410C	110,00
	Front closing frame kit - W x H 103.5 x 78 cm	IL 75/64	P08014430C	110,00
	Front closing frame kit - W x H 93.3 x 70.2 cm	IL 65/56 V	P08016700C	100,00
	Front closing frame kit - W x H 103.3 x 82.2 cm	IL 75/66 V	P08016710C	110,00

INSULATION KIT

	ITEM	INTERNAL COMPATIBLE	CODE	EURO
	Beam insulation kit 20 x 120 cm	All IL models	P08010620C	120,00

UNION KIT FOR NATURAL CONVECTION

	ITEM	INTERNAL COMPATIBLE	CODE	EURO
	Hot air Ø 12 cm pipe union	All IL models	P08010630	7,00
	Ø 12 cm pipe for air connection (3 metre pack)	E928 WF	P08010360	30,00 per pack (3 metres)

COMBUSTION AIR KIT

	ITEM	INTERNAL COMPATIBLE	CODE	EURO
	Combustion air kit	E928 WF	P08061410C	185,00
	Ø 12 cm pipe for air connection (3 metre pack)	E928 WF	P08010360	30,00 per pack (3 metres)

Prices are considered to be without sales taxes. Gruppo Piazzetta S.p.A. reserves the right to modify and/or delete all printed material, if deemed necessary by Gruppo Piazzetta without any written or prior notice.
Document reserved for the Gruppo Piazzetta S.p.A. sales organisation.

INSERTS IL - INSERTS WF

Accessories

ACCESSORIES FOR INSTALLATION

	ITEM	INTERNAL COMPATIBLE	CODE	EURO
	Handles kit	All IL models	P08014450C	40,00

ASH VACUUM CLEANER

	ITEM	INTERNAL COMPATIBLE	CODE	EURO
	Ash vacuum cleaner	All models	N08019040C	100,00

EDGE PROFILE

	ITEM	INTERNAL COMPATIBLE	CODE	EURO
	Black-painted steel edge profile, for masonry finishes	IL 52/57 M	P08018460C	310,00

HSS HEAT STORAGE SYSTEM

	ITEM	INTERNAL COMPATIBLE	CODE	EURO
	HSS kit E928 WF	E928 WF - E928 WF Hermetic BCS	P08061810C	2.400,00

Prices are considered to be without sales taxes. Gruppo Piazzetta S.p.A. reserves the right to modify and/or delete all printed material, if deemed necessary by Gruppo Piazzetta without any written or prior notice.
Document reserved for the Gruppo Piazzetta S.p.A. sales organisation.

WOOD-BURNING FIREBOXES AND INSERTS

Accessories - Pipes, elbows and unions for wood-burning fireboxes and inserts

SINGLE-WALL FUME CHANNELS MADE OF ALUMINISED STEEL, 2 MM THICK, CORROSION RESISTANCE CLASS V2, CONFORMING TO THE EN 1856-2 STANDARD

COMPATIBLE MODELS	ITEM	DIMENSIONS IN CM	Ø CM	UNITS PER PACK	CODE	EURO
IL 65/49 - IL 65/58 - E44/57 IL 52/57 M - IL 75/66 V IL 65/56 V - IL 65/54	Pipe	L 25	15	18	P08021010C	26,00
	Pipe	L 50	15	9	P08021020C	50,00
	Pipe	L 100	15	9	P08021290C	70,00
	Bend 15°	-	15	20	P08021330C	26,00
	Bend 30°	-	15	10	P08021090C	34,00

COMPATIBLE MODELS	ITEM	DIMENSIONS IN CM	Ø CM	UNITS PER PACK	CODE	EURO
MC 65/60 P - MC 65/60 - MC 65/60 SL - MC 70/51 - MC 70/51 SL - MC 80/64 BL - MC 85/55 BL - IL 75/58 - IL 75/64 - IL 75/66 V	Pipe	L 25	18	18	P08021700C	34,00
	Pipe	L 50	18	9	P08021710C	58,00
	Pipe	L 100	18	9	P08021720C	83,00
	Bend 15°	-	18	20	P08021730C	34,00
	Bend 30°	-	18	10	P08021740C	35,00

COMPATIBLE MODELS	ITEM	DIMENSIONS IN CM	Ø CM	UNITS PER PACK	CODE	EURO
MA 260 - MA 260 SL - MA 260 B SL - MA 263 SL - MA 266 SL - MA 280 - MA 280 SL - MA 284 SL - MA 285 SL - MC 90/44 - MC 90/44 SL - MC 120/48 - MC 120/48 SL - MC 105/48 BL - MC 133/52 BL - ME 70 - ME 90 B	Pipe	L 25	20	18	P08021030C	34,00
	Pipe	L 50	20	9	P08021040C	58,00
	Pipe	L 100	20	9	P08021300C	89,00
	Bend 15°	-	20	20	P08021340C	39,00
	Bend 30°	-	20	10	P08021100C	39,00
	Connector	-	20/25	5	P08021140C	153,00

COMPATIBLE MODELS	ITEM	DIMENSIONS IN CM	Ø CM	UNITS PER PACK	CODE	EURO
MA 261- MA 261 SL - MA 262 SL - MA 263 SL - MA 264 SL - MA 271 SL - MA 272 SL - MA 282 - MA 283 SL - ME 90 - ME 90 D/S	Pipe	L 25	25	8	P08021050C	39,00
	Pipe	L 50	25	4	P08021060C	70,00
	Pipe	L 100	25	4	P08021310C	109,00
	Bend 15°	-	25	20	P08021350C	58,00
	Bend 30°	-	25	10	P08021110C	58,00
	Connector	-	25/30	5	P08021150C	153,00

COMPATIBLE MODELS	ITEM	DIMENSIONS IN CM	Ø CM	UNITS PER PACK	CODE	EURO
MA 265 SL	Pipe	L 25	30	8	P08021070C	44,00
	Pipe	L 50	30	4	P08021080C	83,00
	Pipe	L 100	30	4	P08021320C	122,00
	Bend 15°	-	30	20	P08021360C	70,00
	Bend 30°	-	30	10	P08021120C	78,00

UNION FLANGES FOR WOOD-BURNING FIREBOXES

	ITEM	Ø CM	A CM	B CM	C CM	D CM	CODE	EURO
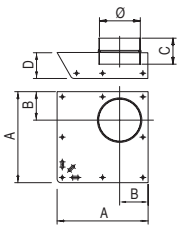	Ceiling / angle flange connector	15	35	11	10	10	P08021540C	78,00
		18	40	12,5	10	10	P08021750C	78,00
		20	40	13,5	10	10	P08021550C	83,00
		25	45	16	10	10	P08021560C	89,00
		30	50	18,5	10	10	P08021570C	96,00
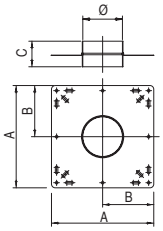	Wall / ceiling flange connector	15	40	20	10	-	P08021500C	64,00
		18	40	20	10	-	P08021760C	70,00
		20	40	20	10	-	P08021510C	70,00
		25	45	22,5	10	-	P08021520C	78,00
		30	45	22,5	10	-	P08021530C	89,00
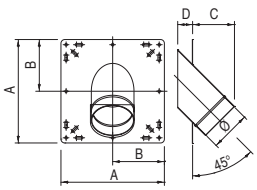	Wall 45° flange connector	15	40	20	16	6	P08021580C	89,00
		18	49	24,5	20	6	P08021770C	89,00
		20	50	25	20	6	P08021590C	96,00
		25	55	52,5	24	6	P08021600C	109,00
		30	60	30	27	6	P08021610C	116,00

Prices are considered to be without sales taxes. Gruppo Piazzetta S.p.A. reserves the right to modify and/or delete all printed material, if deemed necessary by Gruppo Piazzetta without any written or prior notice.
Document reserved for the Gruppo Piazzetta S.p.A. sales organisation.

MP PELLET FIREBOXES

Mod. MP 11 with front hopper

CHARACTERISTICS

- Painted Steel structure with closed firebox.Slide out (mod. MP 980 - MP 980 Hermetic - MP 6 - MP 7 - MP 9 - MP 11)
- Firebox: Hermetic on model MP 980 Hermetic - MP 6
- Firebox: in cast-iron
- Burn pot : in cast iron or steel based on the model.
- Baffle: in cast-iron
- Opening: cast-iron door or in cast-iron / steel depending on model, self-cleaning ceramic glass resistant up to 750°C
- Door handle: hide away and detachable or in steel depending on model
- Functions: LCD remote control and Multicomfort settings, additional control unit
- Chronothermostat: standard with programming mode with 6 daily settings
- Smoke outlet: rear or side with optional kit, depending on the model
- Ash pan: removable
- Fuel: pellet
- Heating: radiation and forced ventilation as standard with Multifuoco System®, ductable
- Installation: MP7 - MP 9 - MP 11 forced air via Multifuoco System remotable in a technical compartment, MP 6 Multifuoco ventilation and remote control unit in a technical compartment
- WI-FI Bluetooth management through MY PIAZZETTA: standard on MP 6 - MP 7 - MP 9 - MP 11; optional on MP 980 - MP 980 Hermetic

ACCESSORIES ON REQUEST

Fronl pellet loading kit depending on the model

Loading kit depending on model

Warm air distribution accessories

Grilles and air vents

Connection for right / left side for discharge depending on model

Connection for right / left side for discharge depending on model

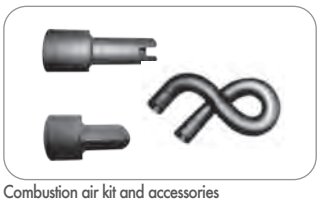

Combustion air kit and accessories

WI-FI module for Piazzetta APP

Edge profile cover depending on model

Ash vacuum cleaner

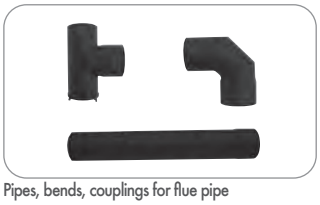

Pipes, bends, couplings for flue pipe

Prices are considered to be without sales taxes. Gruppo Piazzetta S.p.A. reserves the right to modify and/or delete all printed material, if deemed necessary by Gruppo Piazzetta without any written or prior notice.
Document reserved for the Gruppo Piazzetta S.p.A. sales organisation.

FIREBOXES MP

MP 6

FIREBOX	DRAWING	VERSION	CODE	EURO
MP 6		CLOSED	PI2942010-0	**5.295,00**

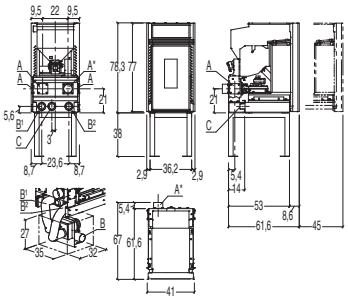

A	B	C
8 cm	7,5 cm	6 cm

Model	Type	Energy efficiency class	Nominal heat output (min - max)	Nominal thermal efficiency (min - max)	Nominal consumption (min - max)	Weight
IP 6	YP170-01	A+	2,9 - 6,1 kW	89,6 - 90,7 %	0,6 - 1,3 kg/h	120 kg

Compatible surrounds

—

ECO DESIGN

ENERGY EFFIC. CLASS

Prices are considered to be without sales taxes. Gruppo Piazzetta S.p.A. reserves the right to modify and/or delete all printed material, if deemed necessary by Gruppo Piazzetta without any written or prior notice.
Document reserved for the Gruppo Piazzetta S.p.A. sales organisation.

FIREBOXES MP

MP 7

MP 7 WITH FRONT LOADING HOPPER

FIREBOX	DRAWING	VERSION	CODE	EURO
MP 7 WITH TRAY And adjustable base kit		CLOSED	PI2907110-0	**5.415,00**
MP 7 WITH DIRECTIONAL LOADING And adjustable base kit		CLOSED	PI2907120-0	**5.460,00**
MP 7 WITH Front loading kit And adjustable base kit		CLOSED	PI2907130-0	**5.820,00**
MP 7 WITH PELLET LOADING KIT RIGHT OR LEFT And adjustable base kit		CLOSED	PI2907140-0	**5.675,00**

Technical data

Model	Type	Energy efficiency class	Nominal heat output	Thermal efficiency	Nominal consumption	Weight
IP 7	YP103-03	A+	3,5-7,0 kW	87,5-87,4 %	0,8-1,6 kg/h	115 kg

Compatible surrounds

City	Darwin	Dresda	Easy	Essen
Gallery	Life	Lipsia	Lithos	Paleo
Shuttle	Shuttle 1	Vienna	Vision	Voyager
Ways	With You			

ECO DESIGN

ENERGY EFFIC. CLASS

Mandatory kits to be combined during installation with the riser kit, feet and Multifuoco System®

PELLET-LOADING TRAYS

ITEM

Pellet-loading front tray

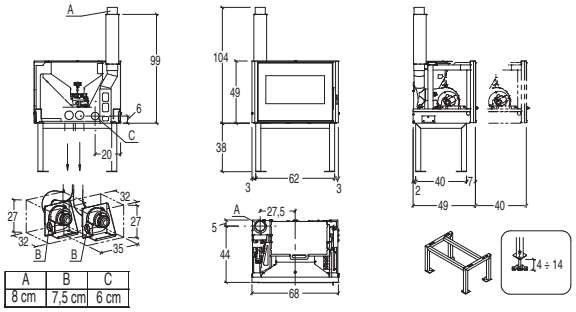

A	B	C
8 cm	7,5 cm	6 cm

PELLET TANKS

ITEM

Kit containing tank with adjustable loading, total capacity approx. 15 kg

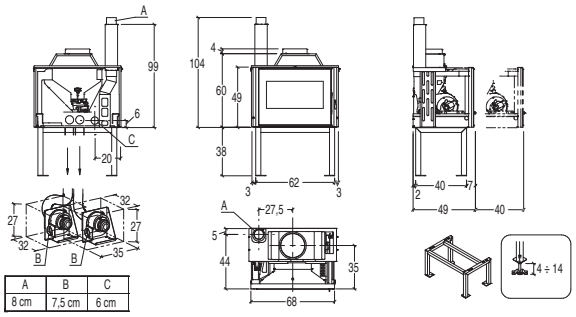

A	B	C
8 cm	7,5 cm	6 cm

Kit containing tank with front loading, total capacity approx. 35 kg

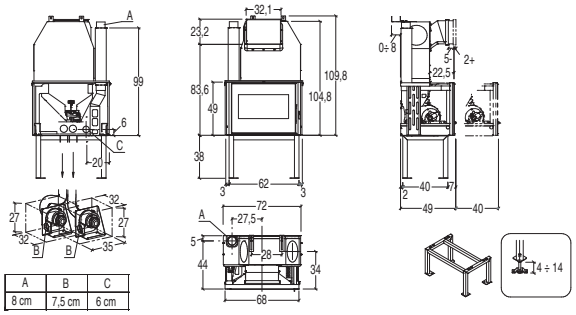

A	B	C
8 cm	7,5 cm	6 cm

Kit containing tank with right-hand or left-hand loading to be positioned on the chimney, total capacity approx. 45 kg

Prices are considered to be without sales taxes. Gruppo Piazzetta S.p.A. reserves the right to modify and/or delete all printed material, if deemed necessary by Gruppo Piazzetta without any written or prior notice.
Document reserved for the Gruppo Piazzetta S.p.A. sales organisation.

FIREBOXES MP

MP 9

MP 9 WITH FRONT LOADING HOPPER

FIREBOX	DRAWING	VERSION	CODE	EURO
MP 9 WITH TRAY And adjustable base kit		CLOSED	PI2909110-0	**5.685,00**
MP 9 WITH DIRECTIONAL LOADING And adjustable base kit		CLOSED	PI2909120-0	**5.735,00**
MP 9 WITH Front loading kit And adjustable base kit		CLOSED	PI2909130-0	**6.095,00**
MP 9 WITH PELLET LOADING KIT RIGHT OR LEFT And adjustable base kit		CLOSED	PI2909140-0	**5.955,00**

Technical data

Model	Type	Energy efficiency class	Nominal heat output	Thermal efficiency	Nominal consumption	Weight
IP 9	YP113-03	A+	4,3-8,7 kW	87,2-88,0 %	1,0-2,0 kg/h	150 kg

Compatible surrounds

Easy

ECO DESIGN

A+ ENERGY EFFIC. CLASS

Mandatory kits to be combined during installation with the riser kit, feet and Multifuoco System®

PELLET-LOADING TRAYS

ITEM

Pellet-loading front tray

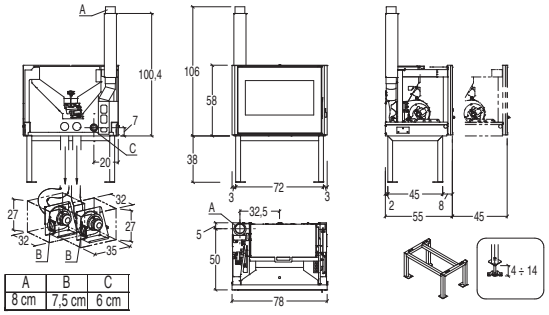

A	B	C
8 cm	7,5 cm	6 cm

PELLET TANKS

ITEM

Kit containing tank with adjustable loading, total capacity approx. 20 kg

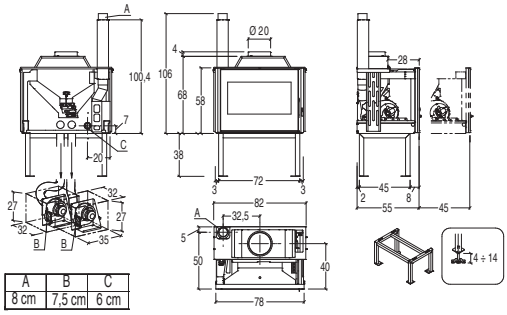

A	B	C
8 cm	7,5 cm	6 cm

Kit containing tank with front loading, total capacity approx. 42 kg

Kit containing tank with right-hand or left-hand loading to be positioned on the chimney, total capacity approx. 52 kg

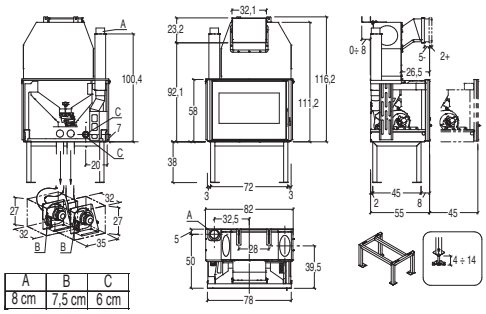

A	B	C
8 cm	7,5 cm	6 cm

Prices are considered to be without sales taxes. Gruppo Piazzetta S.p.A. reserves the right to modify and/or delete all printed material, if deemed necessary by Gruppo Piazzetta without any written or prior notice.
Document reserved for the Gruppo Piazzetta S.p.A. sales organisation.

FIREBOXES MP

MP 11

MP 11 WITH FRONT LOADING HOPPER

FIREBOX	DRAWING	VERSION	CODE	EURO
MP 11 WITH TRAY And adjustable base kit		CLOSED	PI2911110-0	**5.915,00**
MP 11 WITH DIRECTIONAL LOADING And adjustable base kit		CLOSED	PI2911120-0	**5.965,00**
MP 11 WITH Front loading kit And adjustable base kit		CLOSED	PI2911130-0	**6.380,00**
MP 11 WITH PELLET LOADING KIT RIGHT OR LEFT And adjustable base kit		CLOSED	PI2911140-0	**6.215,00**

Technical data

Model	Type	Energy efficiency class	Nominal heat output	Thermal efficiency	Nominal consumption	Weight
IP 11	YP115-03	A+	5,1-10,5 kW	85,3-88,2 %	1,2-2,4 kg/h	173 kg

Compatible surrounds

Easy

ECO DESIGN

A+ ENERGY EFFIC. CLASS

Mandatory kits to be combined during installation with the riser kit, feet and Multifuoco System®

PELLET-LOADING TRAYS

ITEM

Pellet-loading front tray

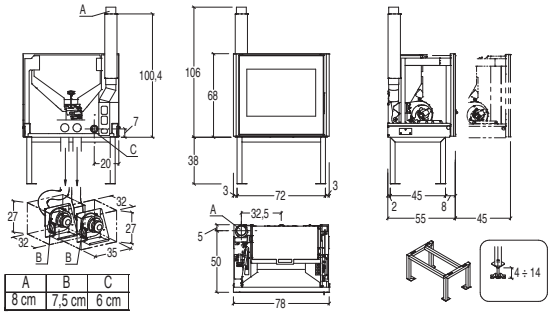

PELLET TANKS

ITEM

Kit containing tank with adjustable loading, total capacity approx. 29 kg

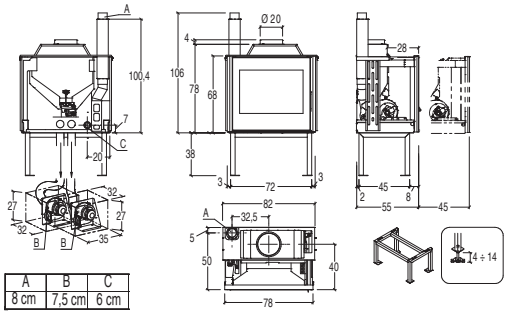

Kit containing tank with front loading, total capacity approx. 51 kg

Kit containing tank with right-hand or left-hand loading to be positioned on the chimney, total capacity approx. 61 kg

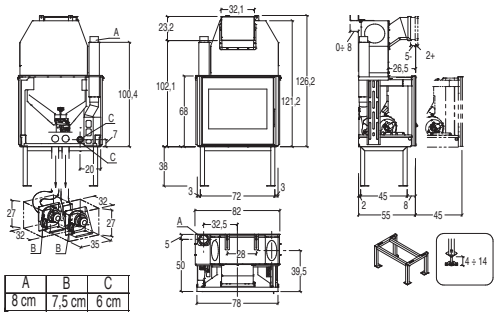

Prices are considered to be without sales taxes. Gruppo Piazzetta S.p.A. reserves the right to modify and/or delete all printed material, if deemed necessary by Gruppo Piazzetta without any written or prior notice.
Document reserved for the Gruppo Piazzetta S.p.A. sales organisation.

FIREBOXES MP

MP 980

FIREBOX	DRAWING	VERSION	CODE	EURO
MP 980		CLOSED	P07980500C	**5.465,00**

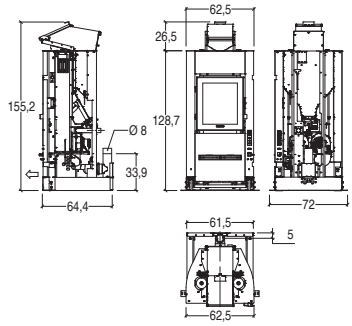

Model	Type	Energy efficiency class	Nominal heat output (min - max)	Nominal thermal efficiency (min - max)	Nominal consumption (min - max)	Weight
MP980 WF	SP233-01	A+	4,0-12,0 kW	88,1-90,7 %	0,9-2,7 kg/h	180 kg

Compatible surrounds

Hobart

ECO DESIGN

ENERGY EFFIC. CLASS

MP 980 Hermetic

FIREBOX	DRAWING	VERSION	CODE	EURO
MP 980 Hermetic		CLOSED	P07980600C	**5.700,00**

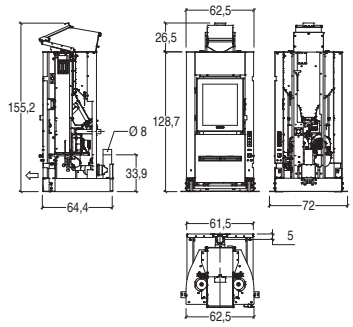

Model	Type	Energy efficiency class	Nominal heat output (min - max)	Nominal thermal efficiency (min - max)	Nominal consumption (min - max)	Weight
MP980-S WF	SP232-01	A+	4,0-12,0 kW	88,1-90,7 %	0,9-2,7 kg/h	180 kg

Compatible surrounds

Hobart

ECO DESIGN

ENERGY EFFIC. CLASS

Prices are considered to be without sales taxes. Gruppo Piazzetta S.p.A. reserves the right to modify and/or delete all printed material, if deemed necessary by Gruppo Piazzetta without any written or prior notice.
Document reserved for the Gruppo Piazzetta S.p.A. sales organisation.

FIREBOXES MP

Accessories

REMOTE MANAGEMENT

	ITEM	INTERNAL COMPATIBLE	CODE	EURO
	Wi-Fi module for control with Piazzetta App	MP 980 MP 980 Hermetic	N08013022C	350,00

ACCESSORIES FOR WARM AIR DUCTING

	ITEM	INTERNAL COMPATIBLE	CODE	EURO
	Hot air ducting kit MP 980	MP 980, MP 980 Hermetic	P08061820C	195,00
	Flex pipe for hot air ducting Ø 7.5 cm	All MP models	N08011005C	19,00
	Y-shaped element Ø 7,5 cm	All MP models	N08011006C	30,00
	Bend connector Ø 7,5 cm	All MP models	N08011007C	30,00
	Pipe-clamp for hot air ducting	All MP models	N08011008C	5,00
	Outlet with union W 25 x H 12 Ø 7.5 cm	All MP models	N08011001C	58,00
	Wall-mounted outlet W 25 x H 11 Ø 7.5 cm	All MP models	N08011002C	83,00
	Connector sleeve Ø 7,5 cm	All MP models	N08011009C	10,00

FRONT FOR FLUSH-TO-THE-PLASTERBOARD WALL FINISH

	ITEM	INTERNAL COMPATIBLE	CODE	EURO
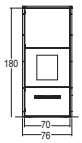	Front for flush-to-the-plasterboard wall finish	MP 980 MP 980 Hermetic	P08062750C	1.670,00

COMPENSATION KIT AND CLOSING FRAMES

	ITEM	INTERNAL COMPATIBLE	CODE	EURO
	Compensation kit (metal profile) 70x51 cm	MP 7	N08010033C	100,00
	Compensation kit (metal profile) 79x55 cm	MP 7	N08010034C	125,00
	Closing frame kit (perforated metal profile) not compatible with pellet-loading tray	MP 7	N08014017C	125,00
		MP 9	N08014018C	125,00
		MP 11	N08014016C	135,00
	Closing frame kit (perforated metal profile) compatible with pellet-loading tray	MP 6	N08014014C	145,00
		MP 7	N08014019C	125,00
		MP 9	N08014020C	125,00
		MP 11	N08014015C	135,00

Prices are considered to be without sales taxes. Gruppo Piazzetta S.p.A. reserves the right to modify and/or delete all printed material, if deemed necessary by Gruppo Piazzetta without any written or prior notice.
Document reserved for the Gruppo Piazzetta S.p.A. sales organisation.

FIREBOXES MP

Accessories

COMBUSTION AIR KIT

	ITEM	INTERNAL COMPATIBLE	CODE	EURO
	Combustion air kit	MP 7	N08010017C	145,00
		MP 9 - MP 11	N08010018C	145,00
	Combustion air kit	MP 980	N08010030C	195,00
	Ø 6 cm flex pipe for external combustion air kit connection	All MP models	N08011017C	19,00

ASH VACUUM CLEANER

	ITEM	INTERNAL COMPATIBLE	CODE	EURO
	Ash vacuum cleaner	All models	N08019040C	100,00

EDGE PROFILE

	ITEM	INTERNAL COMPATIBLE	CODE	EURO
	Edge profile	MP 7	N08014003C	370,00
		MP 9	N08014005C	370,00
		MP 11	N08014008C	370,00
	Edge profile (Front tray kit for pellet loading, compatible)	MP 6	N08014013C	300,00
		MP 7	N08014004C	370,00
		MP 9	N08014006C	370,00
		MP 11	N08014009C	370,00

Prices are considered to be without sales taxes. Gruppo Piazzetta S.p.A. reserves the right to modify and/or delete all printed material, if deemed necessary by Gruppo Piazzetta without any written or prior notice.
Document reserved for the Gruppo Piazzetta S.p.A. sales organisation.

IP PELLET INSERTS

Mod. IP 11 with optional raise

CHARACTERISTICS

- Structure: enamelled steel with closed firebox on sliding tracks
- IP 6 M Hermetic firebox
- Firechamber: in cast iron or steel depending on model
- Burn pot : in cast iron or steel based on the model.
- Baffle: in cast-iron
- Door: cast iron with serigraphed ceramic glass self-cleaning resistant upto 750° C
- Door handle: hide away and detachable
- Function control: via remote control with LCD display standard on IP 6 M - IP 7 M - IP 9 M - IP 11 M and on IP 7 - IP 9 - IP 11 FRAMELESS DOOR; display installable on the wall on IP 7 - IP 9 - IP 11 CAST IRON DOOR
- Chronothermostat: standard with programming mode with 6 daily settings
- Smoke flue: upper rear or rear L - R, side L -R, depending on the model
- Extractable ash tray inside the firebox, depending on the model
- Fuel: pellet
- Pellet loading tray standard: with front silk-screened glass on IP 6 M model
- Heating: radiation and forced ventilation as standard with Multifuoco System®, ductable (IP 6 M - IP 7 M - IP 9 M - IP 11 M); radiation and forced ventilation (IP 7 - IP 9 - IP 11)
- WI-FI Bluetooth management through MY PIAZZETTA: standard on IP 6 M - IP 7 M - IP 9 M - IP 11 M and on IP 7 - IP 9 - IP 11 FRAMELESS DOOR; optional on IP 7 - IP 9 - IP 11 CAST IRON DOOR
- Ash vacuum cleaner: standard on IP 6 M - IP 7 M - IP 9 M - IP 11 M and on IP 7 - IP 9 - IP 11 FRAMELESS DOOR; optional on IP 7 - IP 9 - IP 11 CAST IRON DOOR

ACCESSORIES ON REQUEST

Pellet loading kit, orientable

Additional tank kit with loading front - rear - side

Additional tank kit with loading front

Front pellet loading tray kit

Warm air distribution accessories

Grilles and air vents

Combustion air kit and accessories

Rise kit: H 38 cm
Adjustable rise kit : H 33 - 49 cm

Edge profile

Compensation kit

Closing frame kit

WI-FI module for Piazzetta APP

Ash vacuum cleaner

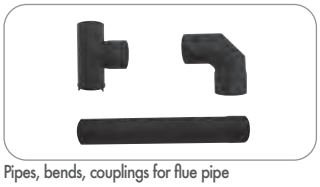

Pipes, bends, couplings for flue pipe

Prices are considered to be without sales taxes. Gruppo Piazzetta S.p.A. reserves the right to modify and/or delete all printed material, if deemed necessary by Gruppo Piazzetta without any written or prior notice.
Document reserved for the Gruppo Piazzetta S.p.A. sales organisation.

INSERTS IP

IP 6 M Multifuoco System

FIREBOX	DRAWING	VERSION	CODE	EURO
IP 6 M		CLOSED	P02942000C	**4.990,00**

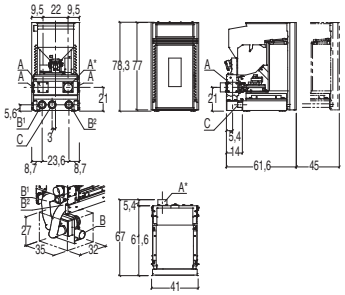

A	B	C
8 cm	7,5 cm	6 cm

Model	Type	Energy efficiency class	Nominal heat output (min - max)	Nominal thermal efficiency (min - max)	Nominal consumption (min - max)	Weight
IP 6 M	YP170-01	A+	2,9 - 6,1 kW	89,6 - 90,7 %	0,6 - 1,3 kg/h	108 kg

Compatible surrounds

—

ECO DESIGN

ENERGY EFFIC. CLASS

Multifuoco System®: to be combined strictly during installation.

IP 7 M Multifuoco System

FIREBOX	DRAWING	VERSION	CODE	EURO
IP 7 M		CLOSED	P02907100C	**4.755,00**

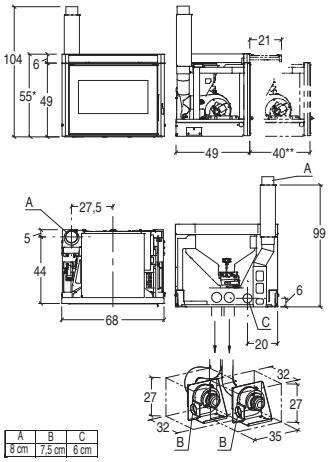

A	B	C
8 cm	7,5 cm	6 cm

* Height with pellet-loading tray (optional).

** Extracted insert overall dimensions.

Model	Type	Energy efficiency class	Nominal heat output	Nominal thermal efficiency	Nominal consumption	Weight
IP 7 M	YP103-03	A+	3,5-7,0 kW	87,5-87,4 %	0,8-1,6 kg/h	113 kg

Compatible surrounds

City	Darwin	Dresda
Easy	Essen	Gallery
Life	Lipsia	Lithos
Paleo	Shuttle	Shuttle 1
Vienna	Vision	Voyager
Ways	With You	

ECO DESIGN

ENERGY EFFIC. CLASS

Multifuoco System®: to be combined strictly during installation.

IP 9 M Multifuoco System

FIREBOX	DRAWING	VERSION	CODE	EURO
IP 9 M		CLOSED	P02909100C	**4.975,00**

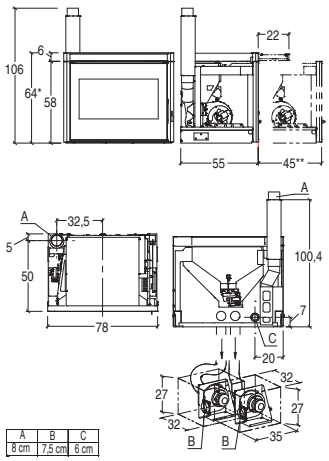

A	B	C
8 cm	7,5 cm	6 cm

* Height with pellet-loading tray (optional).

** Extracted insert overall dimensions.

Model	Type	Energy efficiency class	Nominal heat output	Nominal thermal efficiency	Nominal consumption	Weight
IP 9 M	YP113-03	A+	4,3-8,7 kW	87,2-88,0 %	1,0-2,0 kg/h	143 kg

Compatible surrounds

Easy

ECO DESIGN

ENERGY EFFIC. CLASS

Multifuoco System®: to be combined strictly during installation.

Prices are considered to be without sales taxes. Gruppo Piazzetta S.p.A. reserves the right to modify and/or delete all printed material, if deemed necessary by Gruppo Piazzetta without any written or prior notice.
Document reserved for the Gruppo Piazzetta S.p.A. sales organisation.

INSERTS IP

IP 11 M Multifuoco System

FIREBOX	DRAWING	VERSION	CODE	EURO
IP 11 M		CLOSED	P02911100C	**5.205,00**

Model	Type	Energy efficiency class	Nominal heat output (min - max)	Nominal thermal efficiency (min - max)	Nominal consumption (min - max)	Weight
IP 11 M	YP115-03	A+	5,1-10,5 kW	85,3-88,2 %	1,2-2,4 kg/h	154 kg

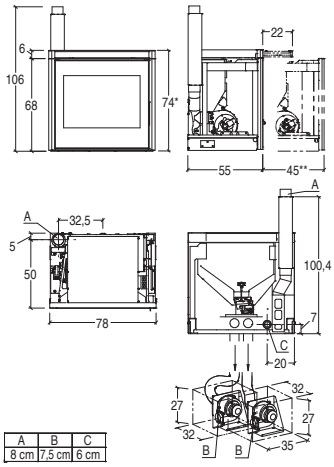

* Height with pellet-loading tray (optional).
** Extracted insert overall dimensions.

Compatible surrounds
Easy

ECO DESIGN
ENERGY EFFIC. CLASS

Multifuoco System®: to be combined strictly during installation.

IP 7 FRAMELESS DOOR

FIREBOX	DRAWING	VERSION	CODE	EURO
IP 7 FRAMELESS DOOR		CLOSED	P02907200C	**3.675,00**

Model	Type	Energy efficiency class	Nominal heat output (min - max)	Nominal thermal efficiency (min - max)	Nominal consumption (min - max)	Weight
IP 7 G	YP103-02	A+	3,5-7,0 kW	88,3-87,4 %	0,8-1,6 kg/h	115 kg

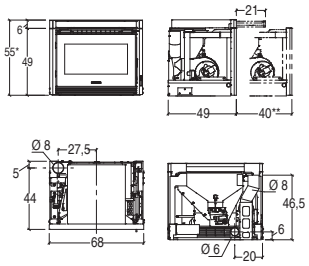

* Height with pellet-loading tray (optional).
** Extracted insert overall dimensions.

Compatible surrounds

City	Darwin	Dresda
Easy	Essen	Gallery
Life	Lipsia	Lithos
Paleo	Shuttle	Shuttle 1
Vienna	Vision	Voyager
Ways	With You	

ECO DESIGN
ENERGY EFFIC. CLASS

IP 7 CAST IRON DOOR

FIREBOX	DRAWING	VERSION	CODE	EURO
IP 7 CAST IRON DOOR		CLOSED	P02907000C	**2.690,00**

Model	Type	Energy efficiency class	Nominal heat output (min - max)	Nominal thermal efficiency (min - max)	Nominal consumption (min - max)	Weight
IP 7	YP103-01	A+	3,5-7,0 kW	88,3-87,4 %	0,8-1,6 kg/h	100 kg

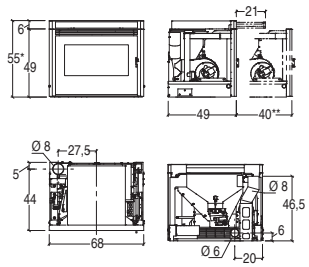

* Height with pellet-loading tray (optional).
** Extracted insert overall dimensions.

Compatible surrounds

City	Darwin	Dresda
Easy	Essen	Gallery
Life	Lipsia	Lithos
Paleo	Shuttle	Shuttle 1
Vienna	Vision	Voyager
Ways	With You	

ECO DESIGN
ENERGY EFFIC. CLASS

Prices are considered to be without sales taxes. Gruppo Piazzetta S.p.A. reserves the right to modify and/or delete all printed material, if deemed necessary by Gruppo Piazzetta without any written or prior notice.
Document reserved for the Gruppo Piazzetta S.p.A. sales organisation.

INSERTS IP

IP 9 FRAMELESS DOOR

FIREBOX	DRAWING	VERSION	CODE	EURO
IP 9 FRAMELESS DOOR		CLOSED	P02909200C	**3.975,00**

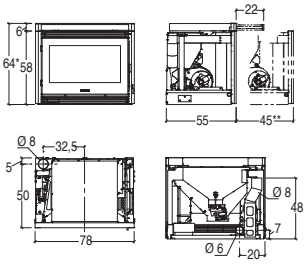

* Height with pellet-loading tray (optional).
** Extracted insert overall dimensions.

Model	Type	Energy efficiency class	Nominal heat output (min - max)	Nominal thermal efficiency (min - max)	Nominal consumption (min - max)	Weight
IP 9 G	YP113-02	A+	4,5-9,0 kW	88,4-87,3 %	1,0-2,1 kg/h	150 kg

Compatible surrounds
Easy

ECO DESIGN
ENERGY EFFIC. CLASS

IP 9 CAST IRON DOOR

FIREBOX	DRAWING	VERSION	CODE	EURO
IP 9 CAST IRON DOOR		CLOSED	P02909000C	**3.225,00**

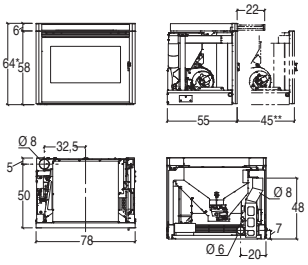

* Height with pellet-loading tray (optional).
** Extracted insert overall dimensions.

Model	Type	Energy efficiency class	Nominal heat output (min - max)	Nominal thermal efficiency (min - max)	Nominal consumption (min - max)	Weight
IP 9	YP113-01	A+	4,5-9,0 kW	88,4-87,3 %	1,0-2,1 kg/h	140 kg

Compatible surrounds
Easy

ECO DESIGN
ENERGY EFFIC. CLASS

IP 11 FRAMELESS DOOR

FIREBOX	DRAWING	VERSION	CODE	EURO
IP 11 FRAMELESS DOOR		CLOSED	P02911200C	**4.050,00**

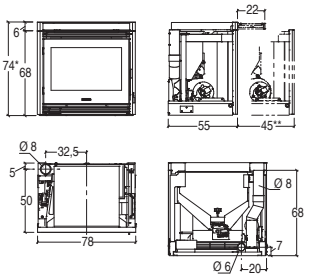

* Height with pellet-loading tray (optional).
** Extracted insert overall dimensions.

Model	Type	Energy efficiency class	Nominal heat output (min - max)	Nominal thermal efficiency (min - max)	Nominal consumption (min - max)	Weight
IP 11 G	YP115-02	A+	4,6-11,0 kW	87,7-87,3 %	1,0-2,6 kg/h	160 kg

Compatible surrounds
Easy

ECO DESIGN
ENERGY EFFIC. CLASS

Prices are considered to be without sales taxes. Gruppo Piazzetta S.p.A. reserves the right to modify and/or delete all printed material, if deemed necessary by Gruppo Piazzetta without any written or prior notice.
Document reserved for the Gruppo Piazzetta S.p.A. sales organisation.

INSERTS IP

IP 11 CAST IRON DOOR

FIREBOX	DRAWING	VERSION	CODE	EURO
IP 11 CAST IRON DOOR		CLOSED	P02911000C	**3.370,00**

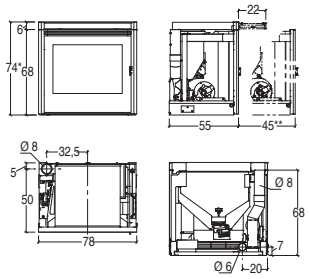

* Height with pellet-loading tray (optional).

** Extracted insert overall dimensions.

Model	Type	Energy efficiency class	Nominal heat output (min - max)	Nominal thermal efficiency (min - max)	Nominal consumption (min - max)	Weight
IP 11	YP115-01	A+	4,6-11,0 kW	87,7-87,3 %	1,0-2,6 kg/h	150 kg

Compatible surrounds

Easy

ECO DESIGN

ENERGY EFFIC. CLASS

INSERTS IP

Accessories

REMOTE MANAGEMENT

	ITEM	INTERNAL COMPATIBLE	CODE	EURO
	WI-FI module for management with the Piazzetta App (in order to install it, you need to have the pellet tray or additional pellet hopper)	IP 7 - IP 9 - IP 11 CAST IRON DOOR	N08013022C	350,00

PELLET-LOADING TRAYS

	ITEM	INTERNAL COMPATIBLE	CODE	EURO
	Pellet-loading front tray	IP 7 M - IP 7	N08019003C	355,00
		IP 9 M - IP 9	N08019004C	405,00
		IP 11 M - IP 11	N08019004C	405,00

PELLET TANKS

	ITEM	INTERNAL COMPATIBLE	CODE	EURO
	Kit containing tank with adjustable loading, total capacity approx. 15 kg	IP 7 M - IP 7	N08019005C	400,00
	Kit containing tank with adjustable loading, total capacity approx. 20 kg	IP 9 M - IP 9	N08019006C	455,00
	Kit containing tank with adjustable loading, total capacity approx. 29 kg	IP 11 M - IP 11	N08019017C	455,00
	Kit containing tank with front loading, total capacity approx. 35 kg	IP 7 M - IP 7	N08019007C	760,00
	Kit containing tank with front loading, total capacity approx. 42 kg	IP 9 M - IP 9	N08019008C	815,00
	Kit containing tank with front loading, total capacity approx. 51 kg	IP 11 M - IP 11	N08019016C	870,00
	Kit containing tank with right-hand or left-hand loading to be positioned on the chimney, total capacity approx. 45 kg	IP 7 M - IP 7	N08019009C	615,00
	Kit containing tank with right-hand or left-hand loading to be positioned on the chimney, total capacity approx. 52 kg	IP 9 M - IP 9	N08019010C	675,00
	Kit containing tank with right-hand or left-hand loading to be positioned on the chimney, total capacity approx. 61 kg	IP 11 M - IP 11	N08019015C	705,00

COMPENSATION KIT AND CLOSING FRAMES

	ITEM	INTERNAL COMPATIBLE	CODE	EURO
	Compensation kit (perforated metal profile) 70x51 cm	IP 7	N08010021C	100,00
		IP 7 M	N08010033C	100,00
	Compensation kit (perforated metal profile) 79x55 cm	IP 7	N08010022C	125,00
		IP 7 M	N08010034C	125,00
	Closing frame kit (perforated metal profile) not compatible with pellet-loading tray	IP 7	N08014001C	125,00
		IP 7 M	N08014017C	125,00
		IP 9	N08014002C	125,00
		IP 9 M	N08014018C	125,00
		IP 11	N08014007C	135,00
		IP 11 M	N08014016C	135,00
	Closing frame kit (perforated metal profile) compatible with pellet-loading tray	IP 6 M	N08014014C	145,00
		IP 7	N08014010C	125,00
		IP 7 M	N08014019C	125,00
		IP 9	N08014011C	125,00
		IP 9 M	N08014020C	125,00
		IP 11	N08014012C	135,00
		IP 11 M	N08014015C	135,00

Prices are considered to be without sales taxes. Gruppo Piazzetta S.p.A. reserves the right to modify and/or delete all printed material, if deemed necessary by Gruppo Piazzetta without any written or prior notice.
Document reserved for the Gruppo Piazzetta S.p.A. sales organisation.

INSERTS IP

Accessories

ACCESSORIES FOR HOT AIR DUCTING

	ITEM	INTERNAL COMPATIBLE	CODE	EURO
	Flex pipe for hot air ducting Ø 7.5 cm	IP 6 M - IP 7 M - IP 9 M - IP 11 M	N08011005C	19,00
	Y-shaped element Ø 7,5 cm	IP 6 M - IP 7 M - IP 9 M - IP 11 M	N08011006C	30,00
	Bend connector Ø 7,5 cm	IP 6 M - IP 7 M - IP 9 M - IP 11 M	N08011007C	30,00
	Pipe-clamp for hot air ducting	for all the IP models	N08011008C	5,00
	Outlet with union W 25 x H 12 Ø 7.5 cm	IP 6 M - IP 7 M - IP 9 M - IP 11 M	N08011001C	58,00
	Wall-mounted outlet W 25 x H 11 Ø 7.5 cm	IP 6 M - IP 7 M - IP 9 M - IP 11 M	N08011002C	83,00
	Connector sleeve Ø 7,5 cm	IP 6 M - IP 7 M - IP 9 M - IP 11 M	N08011009C	10,00

STAND KIT HEIGHT

	ITEM	INTERNAL COMPATIBLE	CODE	EURO
	Fixed rise kit: W 36 x D 53 x H 38 cm	IP 6 M	N08019050C	205,00
	Fixed rise kit: W 62 x D 40 x H 38 cm	IP 7 M - IP 7	N08019001C	205,00
	Fixed rise kit: W 72 x D 45 x H 38 cm	IP 9 M - IP 11 M - IP 9 - IP 11	N08019002C	205,00
	Adjustable legs kit H 42-52 cm	IP 6 M - IP 7 M - IP 7 IP 9 M - IP 11 M IP 9 - IP 11	N08019051C	100,00

COMBUSTION AIR KIT

	ITEM	INTERNAL COMPATIBLE	CODE	EURO
	Combustion air kit	IP 7 M - IP 7	N08010017C	145,00
		IP 9 M - IP 11 M - IP 9 - IP 11	N08010018C	145,00
	Ø 6 cm flex pipe for external combustion air kit connection	All models	N08011017C	19,00

Prices are considered to be without sales taxes. Gruppo Piazzetta S.p.A. reserves the right to modify and/or delete all printed material, if deemed necessary by Gruppo Piazzetta without any written or prior notice.
Document reserved for the Gruppo Piazzetta S.p.A. sales organisation.

INSERTS IP

Accessories

ASH VACUUM CLEANER

	ITEM	INTERNAL COMPATIBLE	CODE	EURO
	Ash vacuum cleaner	IP 7 CAST IRON DOOR IP 9 CAST IRON DOOR IP 11 CAST IRON DOOR	N08019040C	100,00

EDGE PROFILES

	ITEM	INTERNAL COMPATIBLE	CODE	EURO
	Edge profile	IP 7 M - IP 7	N08014003C	370,00
		IP 9 M - IP 9	N08014005C	370,00
		IP 11 M - IP 11	N08014008C	370,00
	Edge profile (Front tray kit for pellet loading, compatible)	IP 6 M	N08014013C	300,00
		IP 7 M - IP 7	N08014004C	370,00
		IP 9 M - IP 9	N08014006C	370,00
		IP 11 M - IP 11	N08014009C	370,00

Prices are considered to be without sales taxes. Gruppo Piazzetta S.p.A. reserves the right to modify and/or delete all printed material, if deemed necessary by Gruppo Piazzetta without any written or prior notice.
Document reserved for the Gruppo Piazzetta S.p.A. sales organisation.

PELLET-BURNING FIREBOXES AND INSERTS

Accessories - Pipes, elbows and unions for pellet-burning fireboxes and inserts

Single-wall fume channels made of aluminised steel, 2 mm thick, corrosion resistance class V2, conforming to the EN 1856-2 standard

	ITEM	DIMENSIONS IN CM	Ø CM	CODE	EURO
	Pipe with inspection	L 25	8	P08025890C	44,00
	Pipe	L 25	8	P08025370C	39,00
	Pipe	L 50	8	P08025380C	64,00
	Pipe	L 100	8	P08025390C	96,00
	Bend 90° with inspection	L 16 x H 16	8	P08025910C	96,00
	Bend 90°	L 16 x H 16	8	P08025400C	89,00
	Bend 45°	L 12 x H 12	8	P08025410C	64,00
	T-shaped union with inspection port	L 14 x H 18	8	P08025430C	102,00
	Flue ring	-	8	P08025490C	34,00
	Wall connector	-	8	P08025550C	34,00

Prices are considered to be without sales taxes. Gruppo Piazzetta S.p.A. reserves the right to modify and/or delete all printed material, if deemed necessary by Gruppo Piazzetta without any written or prior notice.
Document reserved for the Gruppo Piazzetta S.p.A. sales organisation.

MP TH PELLET BOILER FIREBOXES

Mod. MP 973TH

CHARACTERISTICS

- Structure: enamelled steel, closed firebox
- Firebox: in steel and Aluker®
- Boiler: in thick steel structure from 3 to 5 mm, weight 150 kg
- Closed expansion tank: standard
- Circulation pump and safety devices: standard
- Brazier: in refractory steel
- Opening: cast-iron door, self-cleaning ceramic glass resistant up to 750°C
- Door handle: hide away and detachable
- Functions: LCD remote control and Multicomfort settings, additional control unit
- Chronothermostat: standard with programming mode with 6 daily settings
- Flue outlet: left side
- Power regulation: automatic 16 levels based on the water temperature set
- Domestic Hot Water: standard version of ACS
- Fuel: pellet
- Heating: water heat exchanger

ACCESSORIES ON REQUEST

Plate separator kit

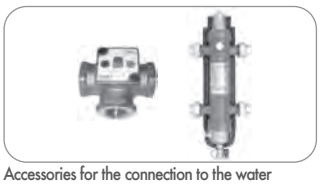

Accessories for the connection to the water supply system

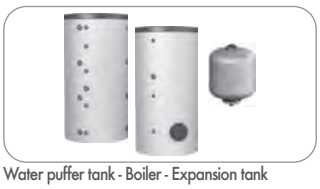

Water puffer tank - Boiler - Expansion tank

Kit for connection to the water supply system: pressure gauge, ball valves and unions

Combustion air kit and accessories

WI-FI module for Piazzetta APP

Ash vacuum cleaner

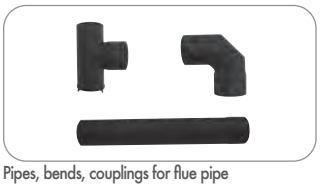

Pipes, bends, couplings for flue pipe

Prices are considered to be without sales taxes. Gruppo Piazzetta S.p.A. reserves the right to modify and/or delete all printed material, if deemed necessary by Gruppo Piazzetta without any written or prior notice.
Document reserved for the Gruppo Piazzetta S.p.A. sales organisation.

FIREBOXES MP TH

MP 973 TH

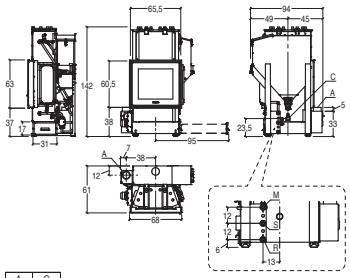

A	C
10 cm	6 cm
S	R	M
3/4 "	3/4 "	3/4 "

A Flue outlet; **C** Combustion air inlet; **S** Safety valve discharge;
R System return; **M** System delivery.

FIREBOX	DRAWING	VERSION	INSTALLATION	CODE	EURO
MP 973 TH		FRONT	Closed tank	P07973110C	**7.005,00**

Model	Type	Energy efficiency class	Nominal heat output (min - max)	Heat output to water (min - max)	Nominal thermal efficiency (min - max)	Nominal consumption (min - max)	Weight
MP973 TH	SP200-01	A+	9,0-30,3 kW	7,5-26,4 kW	92,0-91,9 %	2,0-6,8 kg/h	275 kg

Compatible surrounds

Barcellona	Colonia	Darwin
Easy	Essen	Vienna
Melbourne		

ECO DESIGN

A+ ENERGY EFFIC. CLASS

MP 973 TH ACS

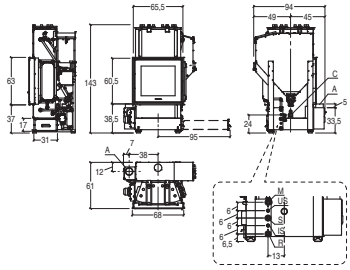

A	C	US	IS
10 cm	6 cm	1/2 "	1/2 "
S	R	M
3/4 "	3/4 "	3/4 "

A Flue outlet; **C** Combustion air inlet; **S** Safety valve discharge; **R** System return;M System delivery; Sanitary water outlet Sanitary hot water system return; Sanitary water inlet Sanitary hot water system delivery.

FIREBOX	DRAWING	VERSION	INSTALLATION	CODE	EURO
MP 973 TH ACS		FRONT	Closed tank	P07973120C	**7.285,00**

Model	Type	Energy efficiency class	Nominal heat output (min - max)	Heat output to water (min - max)	Nominal thermal efficiency (min - max)	Nominal consumption (min - max)	Weight
MP973 TH ACS	SP200-01	A+	9,0-30,3 kW	7,5-26,4 kW	92,0-91,9 %	2,0-6,8 kg/h	278,5 kg

Compatible surrounds

Barcellona	Colonia	Darwin
Easy	Essen	Vienna
Melbourne		

ECO DESIGN

A+ ENERGY EFFIC. CLASS

Prices are considered to be without sales taxes. Gruppo Piazzetta S.p.A. reserves the right to modify and/or delete all printed material, if deemed necessary by Gruppo Piazzetta without any written or prior notice.
Document reserved for the Gruppo Piazzetta S.p.A. sales organisation.

IP TH PELLET-BURNING VENTILATED THERMO INSERTS

Mod. IP 14 TH AIR FLOW FRAMELESS DOOR

CHARACTERISTICS

- Heating: hot water production
- Front ventilation: 3 speed levels, manually controlled. Automatic start, may be completely disabled.
- Firebox: steel
- Boiler: steel
- Fire chamber: steel
- Brazier: cast iron
- Conveyor: steel
- Ash pit: standard
- Expansion tank: standard
- Standard circulator: high efficiency
- Safety valve and relief valve: standard
- Safety microswitch: standard
- Function control: wall-mounted LCD display with timer-thermostat
- Power adjustment: 16 automatic power levels based on water temperature set
- Programmable timer-thermostat: 6 daily time period settings
- Regular brazier cleaning: yes
- Glass cleaning system: yes
- Pellet level sensor: standard with re-load warning message on the display
- Pressure switch: standard
- Eco / Energy saving function: yes / yes
- Anti-freeze function: yes
- Storage tank probe and DHW storage tank probe: standard
- Connectable to an external thermostat: yes
- Ash vacuum cleaner: standard
- Combustion air kit: optional
- Piazzetta App for Wi-Fi management / Management via SMS: optional / optional

Prices are considered to be without sales taxes. Gruppo Piazzetta S.p.A. reserves the right to modify and/or delete all printed material, if deemed necessary by Gruppo Piazzetta without any written or prior notice.
Document reserved for the Gruppo Piazzetta S.p.A. sales organisation.

PELLET-BURNING VENTILATED THERMO INSERTS

IP 14 TH FRAMELESS DOOR

FIREBOX	DRAWING	VERSION	CODE	EURO
IP 14 TH AIR FLOW WITH LOADING TRAY		CLOSED	PI2914110-0	**5.430,00**
IP 14 TH AIR FLOW WITH PELLET LOADING KIT ADJUSTABLE		CLOSED	PI2914120-0	**5.480,00**
IP 14 TH AIR FLOW WITH PELLET LOADING KIT FRONT		CLOSED	PI2914130-0	**5.895,00**
IP 14 TH AIR FLOW WITH PELLET LOADING KIT RIGHT-HAND OR LEFT		CLOSED	PI2914140-0	**5.730,00**

Compatible surrounds

Easy (see compatability with IP 11)

Technical data

Model	Type	Energy efficiency class	Heat output to water	Thermal efficiency	Nominal consumption
IP 14 TH	YP250-01	A+	14,0 kW	90,1 %	3,5 kg/h

ECO DESIGN

A+ ENERGY EFFIC. CLASS

Mandatory kits to be combined during installation.

PELLET-LOADING TRAYS

ITEM

Pellet-loading front tray

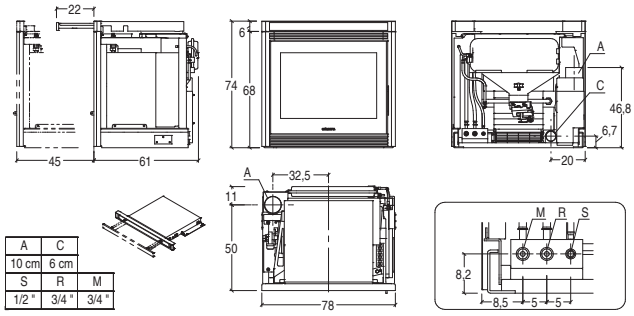

A	C
10 cm	6 cm

S	R	M
1/2 "	3/4 "	3/4 "

PELLET TANKS

ITEM

Kit containing tank with adjustable loading, total capacity approx. 29 kg

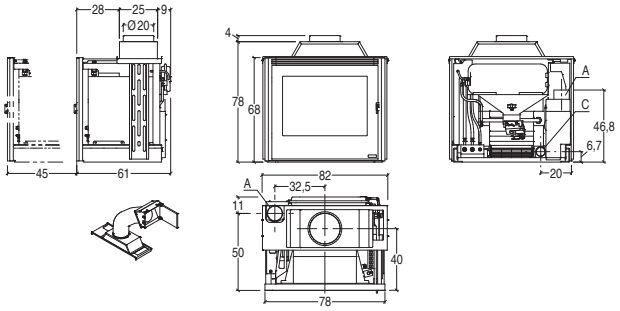

Kit containing tank with front loading, total capacity approx. 51 kg

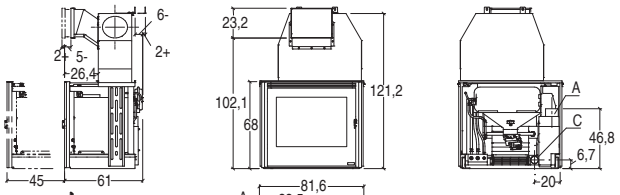

Kit containing tank with right-hand or left-hand loading to be positioned on the chimney, total capacity approx. 61 kg

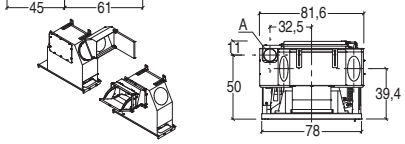

Prices are considered to be without sales taxes. Gruppo Piazzetta S.p.A. reserves the right to modify and/or delete all printed material, if deemed necessary by Gruppo Piazzetta without any written or prior notice.
Document reserved for the Gruppo Piazzetta S.p.A. sales organisation.

PELLET-BURNING VENTILATED THERMO INSERTS

IP 14 TH CAST IRON DOOR

FIREBOX	DRAWING	VERSION	CODE	EURO
IP 14 TH AIR FLOW WITH LOADING TRAY		CLOSED	PI2914210-0	**5.160,00**
IP 14 TH AIR FLOW WITH PELLET LOADING KIT ADJUSTABLE		CLOSED	PI2914220-0	**5.210,00**
IP 14 TH AIR FLOW WITH PELLET LOADING KIT FRONT		CLOSED	PI2914230-0	**5.625,00**
IP 14 TH AIR FLOW WITH PELLET LOADING KIT RIGHT-HAND OR LEFT		CLOSED	PI2914240-0	**5.460,00**

Compatible surrounds

Easy (see compatability with IP 11)

Technical data

Model	Type	Energy efficiency class	Heat output to water	Thermal efficiency	Nominal consumption
IP 14 TH	YP250-01	A+	14,0 kW	90,1 %	3,5 kg/h

ECO DESIGN

A+ ENERGY EFFIC. CLASS

Mandatory kits to be combined during installation.

PELLET-LOADING TRAYS

ITEM

Pellet-loading front tray

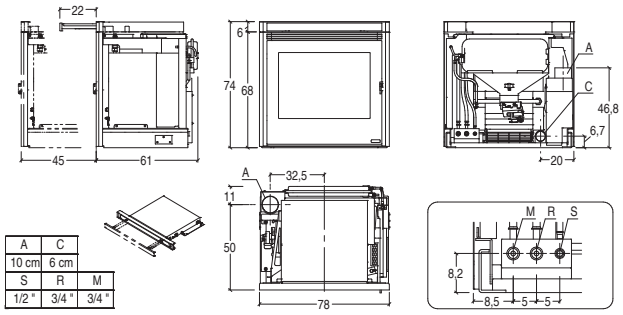

A	C
10 cm	6 cm

S	R	M
1/2 "	3/4 "	3/4 "

PELLET TANKS

ITEM

Kit containing tank with adjustable loading, total capacity approx. 29 kg

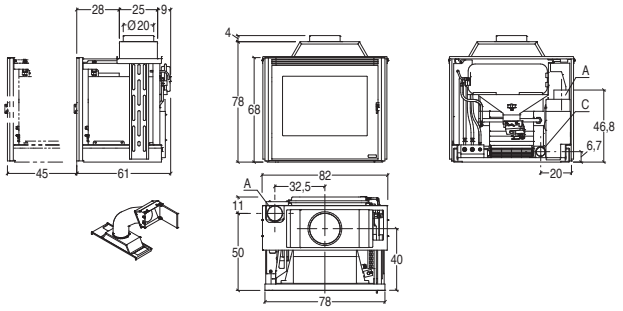

Kit containing tank with front loading, total capacity approx. 51 kg

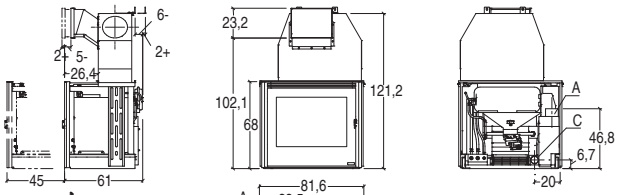

Kit containing tank with right-hand or left-hand loading to be positioned on the chimney, total capacity approx. 61 kg

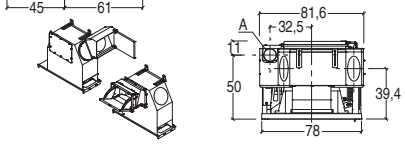

Prices are considered to be without sales taxes. Gruppo Piazzetta S.p.A. reserves the right to modify and/or delete all printed material, if deemed necessary by Gruppo Piazzetta without any written or prior notice.
Document reserved for the Gruppo Piazzetta S.p.A. sales organisation.

FIREBOXES MP TH - INSERTS IP TH

Accessories

PLATE SEPARATOR KIT - WITH 1 CIRCULATOR

	ITEM	COMPATIBLE MODELS	CODE	EURO
	Multifunctional hydraulic separator installable on the wall for dividing the flow rates and heads between the circuits. Inclusive of deaerator for separating and evacuating the air in the system, system safety valve and shut-off valves.	All models	P08061000C	765,00

• Box dimensions L x D x H	cm	45 x 16 x 50
• Maximum operating temperature	°C	95
• Circuit maximum operating pressure	bar	3
• Secondary circuit circulator	mwc	6,5
• Connections	Ø	3/4" M
• Plate heat exchanger power output	kW	35
• Nominal voltage	V	230
• Absorbed power	W	60
• Circulator		1
• Plate heat exchanger		yes

HYDRAULIC SEPARATOR

	ITEM	COMPATIBLE MODELS	CODE	EURO
	Multifunctional hydraulic separator for dividing the flow rates and heads between the circuits. Inclusive of deaerator for separating and evacuating the air present in the circuit, sludge remover for eliminating impurities in the lower zone of the body and magnetic cartridge for blocking ferromagnetic impurities. Equipped with a manual relief valve and drain tap.	All models	P08061050C	615,00

• Dimensions W x H	cm	22,6 x 52,5
• Plumbing connections	Ø	1" with F fittings
• Threaded body		Painted steel
• Air relief valve body		Brass
• Insulation	mm	12
• Maximum operating pressure	bar	10
• Fluid temperature range	°C	0-110
• Maximum glycol percentage	%	30

THERMOSTATIC MIXING VALVE FOR DHW

	ITEM	COMPATIBLE MODELS	CODE	EURO
	Thermostatic mixing valve inclusive of fittings for DHW control. Keeps the temperature of the mixed water constant. Anti-scald system for blocking the flow of hot water in the absence of cold water.	All models	P08061040C	90,00

• Dimensions W x D x H	cm	14,1 x 4,1 x 14,7
• Plumbing connections	Ø	3/4" with M fittings
• Valve body		Brass
• Shutter		Brass
• Springs		Stainless steel
• Activation		Manual
• Adjustment range	°C	30 - 60
• Maximum operating pressure	bar	5
• Kvs	m3/h	1,60
• Max. inlet temperature	°C	120

ANTI-CONDENSATION VALVE 63°C

	ITEM	COMPATIBLE MODELS	CODE	EURO
	Anti-condensation valve 63°C to install on the system delivery. Recommended for connecting heat generators to puffers.	All models	P08061030C	120,00

• Dimensions W x D x H	cm	8,8 x 64
• Plumbing connections	Ø	1" F
• Valve body		Brass
• Cartridge		Die-cast aluminium
• Sensing bulb opening temperature	°C	63
• Complete hysteresis by-pass closing	°C	10
• Fluid temperature range	°C	5-110
• Maximum nominal pressure	bar	10

Prices are considered to be without sales taxes. Gruppo Piazzetta S.p.A. reserves the right to modify and/or delete all printed material, if deemed necessary by Gruppo Piazzetta without any written or prior notice.
Document reserved for the Gruppo Piazzetta S.p.A. sales organisation.

FIREBOXES MP TH - INSERTS IP TH

Accessories

CONNECTION TO HYDRAULIC CIRCUIT

	ITEM	COMPATIBLE MODELS	CODE	EURO
	Kit for connection to the hydraulic system comprising manometer, ball valves and fittings[1]	All models	N08019012C	180,00

[1] If the hydraulic connection kit is installed, a 1" fitting is used instead of a 3/4" fitting for connection to the system.

VERSION 500 PUFFER WITH DOUBLE HEAT EXCHANGER

	ITEM	COMPATIBLE MODELS	CODE	EURO
	Technical puffer with double carbon steel exchanger. Double serpentine exchanger. 5 cm-thick rigid expanded polyurethane insulation.	All models	P08061080C	1.785,00

• Dimensions W x H	cm	Ø 75 x 162
• Weight	kg	180
• Net volume	lt	478
• Upper / lower heat exchanger surface	m²	1,3 / 1,9
• Storage tank max. pressure	bar	3
• Storage tank max. temperature	°C	99
• Heat exchanger max. pressure	bar	12
• Technical water storage tank temperature	°C	110

VERSION 600 PUFFER WITH DOUBLE HEAT EXCHANGER

	ITEM	COMPATIBLE MODELS	CODE	EURO
	Technical puffer with double carbon steel exchanger. Double serpentine exchanger. 5 cm-thick rigid expanded polyurethane insulation.	All models	P08061320C	2.005,00

• Dimensions W x H	cm	Ø 75 x 187
• Weight	kg	150
• Net volume of technical water	lt	560
• Upper / lower heat exchanger surface	m²	1,3 / 2,1
• Heat exchangers max. pressure	bar	12
• Heat exchanger max. temperature	°C	110
• Technical water storage tank max. pressure	bar	3
• Technical water storage tank temperature	°C	99

VERSION 800 PUFFER WITH DOUBLE EXCHANGER

	ITEM	COMPATIBLE MODELS	CODE	EURO
	Technical puffer with double carbon steel exchanger. Double serpentine exchanger. 5 cm-thick rigid expanded polyurethane insulation.	All models	P08061330C	2.475,00

• Dimensions W x H	cm	Ø 94 x 184
• Weight	kg	170
• Net volume of technical water	lt	805
• Upper / lower heat exchanger surface	m²	1,8 / 2,5
• Heat exchangers max. pressure	bar	12
• Heat exchanger max. temperature	°C	110
• Technical water storage tank max. pressure	bar	3
• Technical water storage tank temperature	°C	99

Prices are considered to be without sales taxes. Gruppo Piazzetta S.p.A. reserves the right to modify and/or delete all printed material, if deemed necessary by Gruppo Piazzetta without any written or prior notice.
Document reserved for the Gruppo Piazzetta S.p.A. sales organisation.

FIREBOXES MP TH - INSERTS IP TH

Accessories

VERSION 1000 PUFFER WITH DOUBLE HEAT EXCHANGER

	ITEM	COMPATIBLE MODELS	CODE	EURO
	Technical puffer with double carbon steel exchanger. Double serpentine exchanger. 5 cm-thick rigid expanded polyurethane insulation.	All models	P08061090C	2.550,00

• Dimensions W x H	cm	Ø 99 x 213
• Weight	kg	220
• Net volume	lt	946
• Upper / lower heat exchanger surface	m²	2,5 / 3,1
• Storage tank max. pressure	bar	3
• Storage tank max. temperature	°C	99
• Heat exchanger max. pressure	bar	12
• Heat exchanger max. temperature	°C	110

VERSION 600 TANK-IN-TANK PUFFER

	ITEM	COMPATIBLE MODELS	CODE	EURO
	Technical puffer and integrated puffer for DHW. Double serpentine exchanger. Standard magnesium anode. 5 cm-thick rigid expanded polyurethane insulation.	All models	P08061100C	2.490,00

• Dimensions W x H	cm	Ø 75 x 192
• Weight	kg	180
• Net volume of technical water	lt	375
• Net volume of domestic hot water	lt	146
• Upper / lower heat exchanger surface	m²	1,9 / 2,8
• Upper / lower heat exchanger volume	lt	12 / 20
• Heat exchangers max. pressure	bar	12
• Technical water storage tank temperature	°C	110
• Technical water storage tank max. pressure	bar	3
• Technical water storage tank temperature	°C	99
• SHW storage tank max. pressure	bar	6
• SHW storage tank max. temperature	°C	95
• Heat exchanger max. temperature	°C	110

VERSION 1000 TANK-IN-TANK PUFFER

	ITEM	COMPATIBLE MODELS	CODE	EURO
	Technical puffer and integrated puffer for DHW. Double serpentine exchanger. Standard magnesium anode. 5 cm-thick rigid expanded polyurethane insulation.	All models	P08061110C	3.635,00

• Dimensions W x H	cm	Ø 95 x 218
• Weight	kg	270
• Net volume of technical water	lt	661
• Net volume of domestic hot water	lt	226
• Upper / lower heat exchanger surface	m²	3,1 / 3,7
• Upper / lower heat exchanger volume	lt	20 / 24
• Heat exchangers max. pressure	bar	12
• Technical water storage tank temperature	°C	110
• Technical water storage tank max. pressure	bar	3
• Technical water storage tank temperature	°C	99
• SHW storage tank max. pressure	bar	6
• SHW storage tank max. temperature	°C	95
• Heat exchanger max. temperature	°C	110

Prices are considered to be without sales taxes. Gruppo Piazzetta S.p.A. reserves the right to modify and/or delete all printed material, if deemed necessary by Gruppo Piazzetta without any written or prior notice.
Document reserved for the Gruppo Piazzetta S.p.A. sales organisation.

FIREBOXES MP TH - INSERTS IP TH

Accessories

VERSION 600 PUFFER PIPE IN TANK

	ITEM	COMPATIBLE MODELS	CODE	EURO
	Technical puffer and integrated stainless stainless steel puffer for DHW. Double serpentine exchanger. 5 cm-thick rigid expanded polyurethane insulation.	All models	P08061340C	3.215,00

• Dimensions W x H	cm	Ø 75 x 187
• Weight	kg	155
• Net volume of technical water	lt	500
• Upper / lower heat exchanger surface	m²	1,3 / 2,1
• Upper / lower heat exchanger volume	lt	8 / 13
• Heat exchangers max. pressure	bar	12
• Heat exchanger max. temperature	°C	110
• Technical water storage tank max. pressure	bar	3
• Technical water storage tank temperature	°C	99
• DHW exchanger surface	m²	5,3
• DHW exchanger volume	lt	31

VERSION 800 PUFFER PIPE IN TANK

	ITEM	COMPATIBLE MODELS	CODE	EURO
	Technical puffer and integrated stainless stainless steel puffer for DHW. Double serpentine exchanger. 5 cm-thick rigid expanded polyurethane insulation.	All models	P08061350C	4.160,00

• Dimensions W x H	cm	Ø 95 x 184
• Weight	kg	205
• Net volume of technical water	lt	738
• Upper / lower heat exchanger surface	m²	1,8 / 2,5
• Upper / lower heat exchanger volume	lt	11,8 / 16,3
• Heat exchangers max. pressure	bar	12
• Heat exchanger max. temperature	°C	110
• Technical water storage tank max. pressure	bar	3
• Technical water storage tank temperature	°C	99
• DHW exchanger surface	m²	5,8
• DHW exchanger volume	lt	33,4

VERSION 1000 PUFFER PIPE IN TANK

	ITEM	COMPATIBLE MODELS	CODE	EURO
	Technical puffer and integrated stainless stainless steel puffer for DHW. Double serpentine exchanger. 5 cm-thick rigid expanded polyurethane insulation.	All models	P08061360C	4.690,00

• Dimensions W x H	cm	Ø 95 x 213
• Weight	kg	238
• Net volume of technical water	lt	855
• Upper / lower heat exchanger surface	m²	2,5 / 3,1
• Upper / lower heat exchanger volume	lt	16,3 / 20,7
• Heat exchangers max. pressure	bar	12
• Heat exchanger max. temperature	°C	110
• Technical water storage tank max. pressure	bar	3
• Technical water storage tank temperature	°C	99
• DHW exchanger surface	m²	7,8
• DHW exchanger volume	lt	45,5

Prices are considered to be without sales taxes. Gruppo Piazzetta S.p.A. reserves the right to modify and/or delete all printed material, if deemed necessary by Gruppo Piazzetta without any written or prior notice.
Document reserved for the Gruppo Piazzetta S.p.A. sales organisation.

FIREBOXES MP TH - INSERTS IP TH

Accessories

VERSION 150 DOMESTIC WATER BOILER

	ITEM	COMPATIBLE MODELS	CODE	EURO
	Boiler with single heat exchanger for the production and storage of domestic hot water (DHW). Standard magnesium anode. 5 cm-thick rigid expanded polyurethane insulation.	All models	P08061060C	985,00

• Dimensions W x H	cm	Ø 50 x 141,4
• Weight	kg	49
• Net volume	l	147
• No. of heat exchangers	-	1
• Heat exchangers' surface	m²	0,60
• Storage tank max. pressure	bar	10
• Storage tank max. temperature	°C	90
• Heat exchanger max. pressure	bar	12
• Heat exchanger max. temperature	°C	110

VERSION 300 DOMESTIC WATER BOILER

	ITEM	COMPATIBLE MODELS	CODE	EURO
	Boiler with double serpentine heat exchanger for the production and storage of domestic hot water (DHW). Standard magnesium anode. 5 cm-thick rigid expanded polyurethane insulation.	All models	P08061070C	1.335,00

• Dimensions W x H	cm	Ø 65 x 148,6
• Weight	kg	83
• Net volume	l	291
• No. of heat exchangers	-	2
• Upper / lower heat exchanger surface	m²	0,7 / 1,2
• Storage tank max. pressure	bar	10
• Storage tank max. temperature	°C	90
• Heat exchanger max. pressure	bar	12
• Heat exchanger max. temperature	°C	110

VERSION 18 SHW EXPANSION TANK

	ITEM	COMPATIBLE MODELS	CODE	EURO
	Expansion tank for domestic water systems	All Tank-in-Tank Puffer models and SHW Boilers	P08061140C	40,00

• Dimensions W x H	cm	Ø 26 x 38
• Capacity	lt	18
• Plumbing connections	Ø	M 3/4"
• Diaphragm		EPDM
• Pre-filling pressure	bar	2,50
• Maximum operating pressure	bar	8
• Operating temperature	°C	-10÷100
• External finish		Grigio

VERSION 12 EXPANSION TANK FOR HEATING SYSTEM

	ITEM	COMPATIBLE MODELS	CODE	EURO
	Expansion tank for heating systems	All models	P08061120C	35,00

• Dimensions W x H	cm	Ø 28,5 x 32,5
• Capacity	lt	12
• Plumbing connections	Ø	M 3/4"
• Diaphragm		SBR
• Pre-filling pressure	bar	1,50
• Maximum operating pressure	bar	4
• Operating temperature	°C	-10÷100
• External finish		Red

Prices are considered to be without sales taxes. Gruppo Piazzetta S.p.A. reserves the right to modify and/or delete all printed material, if deemed necessary by Gruppo Piazzetta without any written or prior notice.
Document reserved for the Gruppo Piazzetta S.p.A. sales organisation.

FIREBOXES MP TH - INSERTS IP TH

Accessories

EXPANSION TANK FOR HEATING SYSTEM VERSION 24

	ITEM	COMPATIBLE MODELS	CODE	EURO
	Expansion tank for heating systems	All models	P08061130C	45,00

- Dimensions W x H — cm — Ø 32,5 x 42
- Capacity — lt — 24
- Plumbing connections — Ø — M 3/4"
- Diaphragm — SBR
- Pre-filling pressure — bar — 1,50
- Maximum operating pressure — bar — 4
- Operating temperature — °C — -10÷100
- External finish — Red

REMOTE MANAGEMENT

	ITEM	INTERNAL COMPATIBLE	CODE	EURO
	WI-FI module for management with the Piazzetta App (in order to install it, you need to have the pellet tray or additional pellet hopper)	All models	N08013022C	350,00

COMPENSATION KIT AND CLOSING FRAMES

	ITEM	INTERNAL COMPATIBLE	CODE	EURO
	Closing frame kit (perforated metal profile) compatible with pellet-loading tray	IP 14 TH	P08060710C	135,00
	Closing frame kit (perforated metal profile) not compatible with pellet-loading tray	IP 14 TH	P08016550C	135,00

EDGE PROFILES

	ITEM	INTERNAL COMPATIBLE	CODE	EURO
	Edge profile	IP 14 TH	N08014008C	370,00
	Edge profile (Front tray kit for pellet loading, compatible)	IP 14 TH	N08014009C	370,00

STAND KIT HEIGHT

	ITEM	INTERNAL COMPATIBLE	CODE	EURO
	Stand kit height W 72 x D 45 x H 38 cm	IP 14 TH	N08019002C	205,00

COMBUSTION AIR KIT

	ITEM	INTERNAL COMPATIBLE	CODE	EURO
	Combustion air kit	MP 973 TH	N08010011C	35,00
	Combustion air kit	IP 14 TH	N08010018C	145,00
	Ø 6 cm flex pipe for external combustion air kit connection	All models	N08011017C	19,00

Prices are considered to be without sales taxes. Gruppo Piazzetta S.p.A. reserves the right to modify and/or delete all printed material, if deemed necessary by Gruppo Piazzetta without any written or prior notice.
Document reserved for the Gruppo Piazzetta S.p.A. sales organisation.

FIREBOXES MP TH - INSERTS IP TH

Accessories

ASH VACUUM CLEANER

	ITEM	INTERNAL COMPATIBLE	CODE	EURO
	Ash vacuum cleaner	All models	N08019040C	100,00

Accessories - coaxial tubes and elbows

SINGLE-WALL FUME CHANNELS MADE OF ALUMINISED STEEL, 2 MM THICK, CORROSION RESISTANCE CLASS V2, CONFORMING TO THE EN 1856-2 STANDARD

FIREBOXES MP TH - INSERTS IP TH

COMPATIBLE MODELS	ITEM	DIMENSIONS IN CM	Ø CM	CODE	EURO
All models	Pipe with inspection	L 25	10	P08025980C	44,00
	Pipe	L 25	10	P08025920C	39,00
	Pipe	L 50	10	P08025930C	70,00
	Pipe	L 100	10	P08025940C	96,00
	Bend 90° with inspection	L 18 x H 18	10	P08025990C	96,00
	Bend 90°	L 18 x H 18	10	P08025950C	89,00
	Bend 45°	L 12 x H 12	10	P08025960C	64,00
	T-shaped union with inspection port	L 20 x H 16	10	P08025970C	96,00
	Flue ring	-	10	P08025480C	44,00
	Wall connector	-	10	P08025560C	39,00

Prices are considered to be without sales taxes. Gruppo Piazzetta S.p.A. reserves the right to modify and/or delete all printed material, if deemed necessary by Gruppo Piazzetta without any written or prior notice.
Document reserved for the Gruppo Piazzetta S.p.A. sales organisation.

COMMON ACCESSORIES

Grilles, outlets, hot air ducting and various accessories

GRILLES

	ITEM	DIMENSIONS IN CM	INTERNAL COMPATIBLE	UNITS PER PACK	CODE	EURO
	White-painted aluminium grille for hood	14 x 39	All models	5	N08010001	30,00
	White-painted aluminium intake grille	17 x 17	All models	5	N08010002	39,00

BLASTED STEEL OUTLETS

	ITEM	DIMENSIONS IN CM	UNITS PER PACK	CODE	EURO
	Blasted steel outlets for hood	22 x 5	1	N08011011C	64,00
	Blasted steel outlets for hood	43 x 5	1	N08011013C	78,00
	Black-painted steel outlets for hood	22 x 5	1	N08011012C	25,00
	Black-painted steel outlets for hood	43 x 5	1	N08011014C	34,00
	White-painted steel outlets for hood	22 x 5	1	N08011018C	25,00
	White-painted steel outlets for hood	43 x 5	1	N08011019C	34,00

EXTERNAL AIR INTAKE GRILLE

	ITEM	DIMENSIONS IN CM	UNITS PER PACK	CODE	EURO
	Black-painted steel grille with remote control (W. max. 2 m)	15 x 20	5	N08010003	172,00
		15 x 35	5	N08010004	174,00
	Black-painted steel grille with remote control	15 x 20	5	N08010005	80,00
		15 x 35	5	N08010006	90,00
	White-painted aluminium grille with manual control	17,5 x 27,5	5	N08010007	39,00
		17,5 x 32,5	5	N08010008	39,00

HOT AIR DUCTING ACCESSORIES

	ITEM	DIMENSIONS IN CM	UNITS PER PACK	CODE	EURO
	Flexible aluminium pipe	Ø 7,5	30 m	N08011005C	19,00
		Ø 12	3 m	P08010360C	34,00
		Ø 15	3 m	P08021790C	35,00
	Aluminium "Y" connector	Ø 7,5	10	N08011006C	30,00
		Ø 12	10	P08010370C	78,00
		Ø 15	10	P08021800C	78,00
	Aluminium bend connector	Ø 7,5	10	N08011007C	30,00
	Steel clamp	Ø 7,5	50	N08011008C	5,00
		Ø 12	50	P08010390C	2,00
		Ø 15	50	P08021810C	2,00
	Connector sleeve	Ø 7,5	50	N08011009C	10,00
		Ø 12	50	P08010380C	19,00
		Ø 15	50	P08021820C	19,00
	Hot air ducting full kit with covering: - 2 m of flex pipe Ø 7.5 cm - 4 pipe-clamps - 2 union outlets for cladding	-	-	P08011400C	120,00

Prices are considered to be without sales taxes. Gruppo Piazzetta S.p.A. reserves the right to modify and/or delete all printed material, if deemed necessary by Gruppo Piazzetta without any written or prior notice.
Document reserved for the Gruppo Piazzetta S.p.A. sales organisation.

COMMON ACCESSORIES

Grilles, outlets, hot air ducting and various accessories

HOT AIR VENTING OUTLETS

	ITEM	DIMENSIONS IN CM	UNITS PER PACK	CODE	EURO
	Recessed outlet for covering	15 x 12,5	10	P08010970C	30,00
	Outlet with closure, made of white-painted aluminium	12 x 25 Ø 7,5	10	N08011001C	58,00
		12 x 46 Ø 7,5	5	P08012540C	89,00
	Wall-mounted outlet, made of white-painted aluminium	11 x 25 Ø 7,5	6	N08011002C	83,00
	Outlet without closure, made of white-painted aluminium	9,5 x 9,5 Ø 7,0	1	N08011003C	64,00
		16 x 16 Ø 12	5	P08010340C	64,00
		16 x 16 Ø 15	5	P08011320C	64,00
	Outlet with closure, made of white-painted aluminium	9,5 x 9,5 Ø 7,0	1	N08011004C	70,00
		16 x 16 Ø 15	5	P08010350C	96,00
		16 x 16 Ø 15	5	P08011310C	96,00
	Suction outlet with 15 W fan made of white-painted aluminium	17 x 17 Ø 12	5	P08023060C	184,00

BLASTED OR PAINTED STEEL OUTLETS

	ITEM	DIMENSIONS IN CM	UNITS PER PACK	CODE	EURO
	Blasted steel wall-mounted outlet	22 x 5 Ø 7,5	1	NI08012400-0	154,00
	Black-painted steel wall-mounted outlet	22 x 5 Ø 7,5	1	NI08014190-0	115,00
	Wall air vent, white enamelled steel	22 x 5 Ø 7,5	1	NI08014400-0	115,00
	Blasted steel wall-mounted outlet	43 x 5 Ø 7,5	1	NI08012410-0	258,00
	Black-painted steel wall-mounted outlet	43 x 5 Ø 7,5	1	NI08014200-0	214,00
	Wall air vent, white enamelled steel	43 x 5 Ø 7,5	1	NI08014410-0	214,00

VARIOUS ACCESSORIES

ITEM	QUANTITIES	UNITS PER PACK	CODE	EURO
Transparent silicone	50 g	-	P08012600C	5,00
Sealant	-	40 x 0,5 Kg	P08012500C	5,00
High temperature black silicone	310 ml	-	P08012550C	40,00
Protective glove	-	-	F01075250C	12,00
Spray detergent for stainless steel aesthetic components	600 ml	-	P08013000C	30,00

Prices are considered to be without sales taxes. Gruppo Piazzetta S.p.A. reserves the right to modify and/or delete all printed material, if deemed necessary by Gruppo Piazzetta without any written or prior notice.
Document reserved for the Gruppo Piazzetta S.p.A. sales organisation.

WALL FLUSH DESIGN

THE PRICE INDICATED IS ONLY OF THE SURROUND.

THE TOTAL PRICE IS CALCULATED ADDING THE PRICE OF THE SURROUND TO THE PRICE OF THE FIREBOX AND TO THE TRIMM, THE STEEL ELEMENTS KIT, THE HOOD OR TO THE COMPENSATION KIT PRICE.

Please double check if the compensation kit is necessary for the installation.

In the backing process the enamels of the majolica undergo a high temperature process, their fusion creates various kind of finishes on the surface.

Crazing, pitting and shading are the result of the fusion process and must be considered as characteristics of peculiarity of the majolica and of each enamel.

Hue variation among the elements of the surrounds is an inner characteristic of the enamel that during the backing process reacts in different ways according to the shape and flatness of the surface.

Customizing the majolica is possible with colors different from the ones indicated and bicolor versions, if possible. In these cases a 30% price increase must be applied.

For majolica customizations it is indispensable to check in advance the feasibility.

WALL FLUSH DESIGN

HOBART

Majolica cladding for wall flush installation.

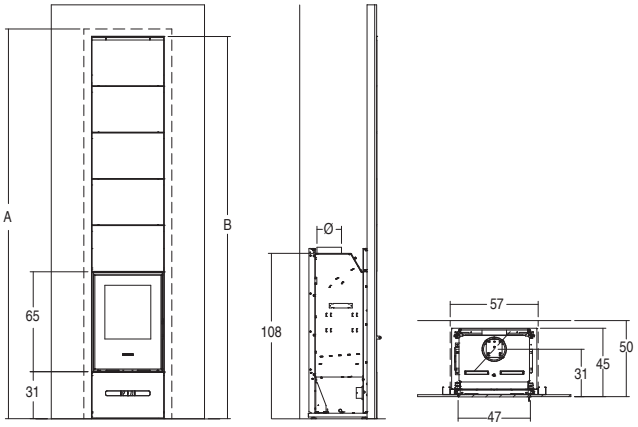

MOD.	A	B	Ø
E928 WF H220	224	220	15
E928 WF H250	254	250	15

MOD.	A	B	Ø
E928 WF Hermetic BCS H220	224	220	15
E928 WF Hermetic BCS H250	254	250	15

Ø Size should be checked during installation.

HOBART H 219

COLOUR	COMPATIBILITY	CODE	EURO
ARDESIA	E928 WF, E928 WF Hermetic BCS	P18903240C	2.235,00
BIANCO		P18903300C	2.235,00
BIANCO ANTICO		P18903640C	2.235,00
BIANCO GRIGIO		P18903410C	2.235,00
KAKI		P18903990C	2.235,00
MATTONE		P189034A0C	2.235,00
SAHARA		P18903220C	2.235,00
SENAPE		P189035A0C	2.235,00
TERRA COTTA		P18903090C	2.235,00
TORTORA		P189036A0C	2.235,00
NERO GRAFITE		P189032B0C	2.235,00
MARRONE TENNÉ		P189033B0C	2.235,00

HOBART H 249

COLOUR	COMPATIBILITY	CODE	EURO
ARDESIA	E928 WF, E928 WF Hermetic BCS	P18902240C	2.510,00
BIANCO		P18902300C	2.510,00
BIANCO ANTICO		P18902640C	2.510,00
BIANCO GRIGIO		P18902410C	2.510,00
KAKI		P18902990C	2.510,00
MATTONE		P189024A0C	2.510,00
SAHARA		P18902220C	2.510,00
SENAPE		P189025A0C	2.510,00
TERRA COTTA		P18902090C	2.510,00
TORTORA		P189026A0C	2.510,00
NERO GRAFITE		P189022B0C	2.510,00
MARRONE TENNÉ		P189023B0C	2.510,00

ACCESSORIES ON REQUEST	
Accessories - Certified pipes and bends for connecting the flue	refer to the end of the section regarding the chosen interior

Prices are considered to be without sales taxes. Gruppo Piazzetta S.p.A. reserves the right to modify and/or delete all printed material, if deemed necessary by Gruppo Piazzetta without any written or prior notice.
Document reserved for the Gruppo Piazzetta S.p.A. sales organisation.

WALL FLUSH DESIGN

HOBART

Majolica cladding for wall flush installation.

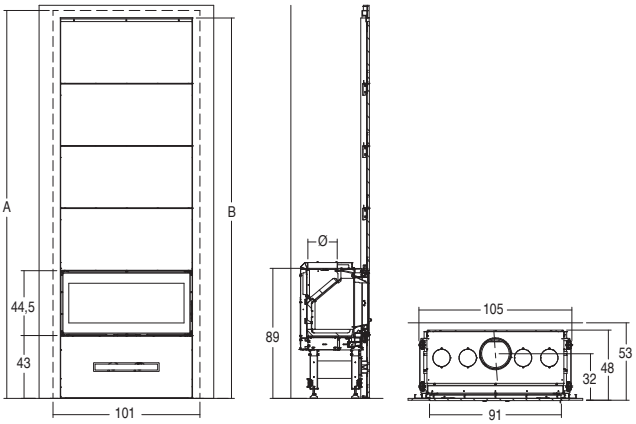

MOD.	A	B	Ø
MC 90/44 H219	224	219	20
MC 90/44 H261	266	261	20

Ø Size should be checked during installation.

HOBART H 219

COLOUR	COMPATIBILITY	CODE	EURO
ARDESIA	MC 90/44	P18904240C	2.845,00
BIANCO		P18904300C	2.845,00
BIANCO ANTICO		P18904640C	2.845,00
BIANCO GRIGIO		P18904410C	2.845,00
KAKI		P18904990C	2.845,00
MATTONE		P189044A0C	2.845,00
SAHARA		P18904220C	2.845,00
SENAPE		P189045A0C	2.845,00
TERRA COTTA		P18904090C	2.845,00
TORTORA		P189046A0C	2.845,00
NERO GRAFITE		P189042B0C	2.845,00
MARRONE TENNÉ		P189043B0C	2.845,00

HOBART H 261

COLOUR	COMPATIBILITY	CODE	EURO
ARDESIA	MC 90/44	P18905240C	3.285,00
BIANCO		P18905300C	3.285,00
BIANCO ANTICO		P18905640C	3.285,00
BIANCO GRIGIO		P18905410C	3.285,00
KAKI		P18905990C	3.285,00
MATTONE		P189054A0C	3.285,00
SAHARA		P18905220C	3.285,00
SENAPE		P189055A0C	3.285,00
TERRA COTTA		P18905090C	3.285,00
TORTORA		P189056A0C	3.285,00
NERO GRAFITE		P189052B0C	3.285,00
MARRONE TENNÉ		P189053B0C	3.285,00

ACCESSORIES ON REQUEST	
Accessories - Certified pipes and bends for connecting the flue	refer to the end of the section regarding the chosen interior

Prices are considered to be without sales taxes. Gruppo Piazzetta S.p.A. reserves the right to modify and/or delete all printed material, if deemed necessary by Gruppo Piazzetta without any written or prior notice.
Document reserved for the Gruppo Piazzetta S.p.A. sales organisation.

WALL FLUSH DESIGN

HOBART

Majolica cladding for wall flush installation.

PELLET

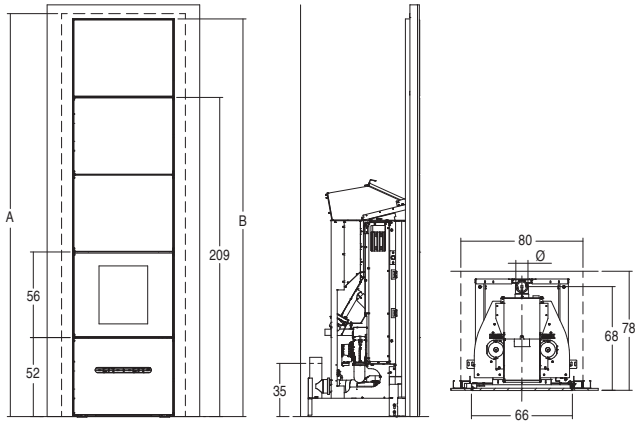

MOD.	A	B	Ø
MP 980 H210	214	210	8
MP 980 H261	265	261	8

MOD.	A	B	C
MP 980 Hermetic H210	214	210	8
MP 980 Hermetic H261	265	261	8

Ø Size should be checked during installation.

HOBART H 210

COLOUR	COMPATIBILITY	CODE	EURO
ARDESIA	MP 980, MP 980 Hermetic	P18901240C	2.950,00
BIANCO		P18901300C	2.950,00
BIANCO ANTICO		P18901640C	2.950,00
BIANCO GRIGIO		P18901410C	2.950,00
KAKI		P18901990C	2.950,00
MATTONE		P189014A0C	2.950,00
SAHARA		P18901220C	2.950,00
SENAPE		P189015A0C	2.950,00
TERRA COTTA		P18901090C	2.950,00
TORTORA		P189016A0C	2.950,00
NERO GRAFITE		P189012B0C	2.950,00
MARRONE TENNÉ		P189013B0C	2.950,00

HOBART H 261

COLOUR	COMPATIBILITY	CODE	EURO
ARDESIA	MP 980, MP 980 Hermetic	P18900240C	3.500,00
BIANCO		P18900300C	3.500,00
BIANCO ANTICO		P18900640C	3.500,00
BIANCO GRIGIO		P18900410C	3.500,00
KAKI		P18900990C	3.500,00
MATTONE		P189004A0C	3.500,00
SAHARA		P18900220C	3.500,00
SENAPE		P189005A0C	3.500,00
TERRA COTTA		P18900090C	3.500,00
TORTORA		P189006A0C	3.500,00
NERO GRAFITE		P189002B0C	3.500,00
MARRONE TENNÉ		P189003B0C	3.500,00

ACCESSORIES ON REQUEST	
Accessories - Certified pipes and bends for connecting the flue	refer to the end of the section regarding the chosen interior

Prices are considered to be without sales taxes. Gruppo Piazzetta S.p.A. reserves the right to modify and/or delete all printed material, if deemed necessary by Gruppo Piazzetta without any written or prior notice.
Document reserved for the Gruppo Piazzetta S.p.A. sales organisation.

I VENEZIANI

THE PRICE INDICATED IS ONLY OF THE SURROUND.

THE TOTAL PRICE IS CALCULATED ADDING THE PRICE OF THE SURROUND TO THE PRICE OF THE FIREBOX AND TO THE TRIMM, THE STEEL ELEMENTS KIT, THE HOOD OR TO THE COMPENSATION KIT PRICE.

Please double check if the compensation kit is necessary for the installation.

With the double sided firebox must be provided the second surround.

In the backing process the enamels of the majolica undergo a high temperature process, their fusion creates various kind of finishes on the surface.

Crazing, pitting and shading are the result of the fusion process and must be considered as characteristics of peculiarity of the majolica and of each enamel.

Hue variation among the elements of the surrounds is an inner characteristic of the enamel that during the backing process reacts in different ways according to the shape and flatness of the surface.

Customizing the majolica is possible with colors different from the ones indicated and bicolor versions, if possible. In these cases a 30% price increase must be applied.

For majolica customizations it is indispensable to check in advance the feasibility.

I VENEZIANI

ACADEMY

Hand-crafted Majolica cladding with base, front piece and profiles in blasted Steel.

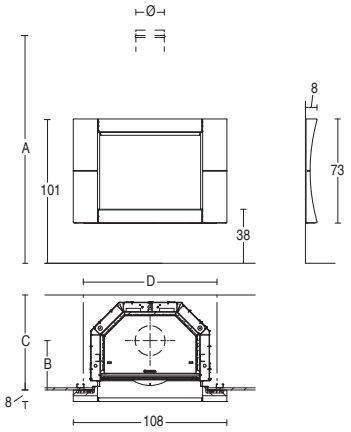

MOD.	A	B	C	D	Ø
MA 260 SL	158,5	42,5	64,5	90	20
MA 260 SL PLUS	198,5	42,5	74,5	100	20
MA 260 B SL	158,5	33,3	66,6	91,5	20

MOD.	A	B	C	D	Ø
MC 70/51	91	38,5	58,5	97	18
MC 70/51 SL	91	42,5	63,5	97	18

Ø Size should be checked during installation.

COLOUR	COMPATIBILITY	CODE	EURO
GRIGIO FERRO	MA 260 SL, MA 260 SL PLUS, MA 260 B SL, MC 70/51, MC 70/51 SL	P16089910C	1.780,00
MOKA		P16089890C	1.905,00
NEVE		P16089650C	1.780,00

If the Multifuoco System® is installed, you need to include vents in the false walling. The vents must be ordered separately.

ACCESSORIES ON REQUEST	
Accessories - Certified pipes and bends for connecting the flue	refer to the end of the section regarding the chosen interior

Prices are considered to be without sales taxes. Gruppo Piazzetta S.p.A. reserves the right to modify and/or delete all printed material, if deemed necessary by Gruppo Piazzetta without any written or prior notice.
Document reserved for the Gruppo Piazzetta S.p.A. sales organisation.

I VENEZIANI

ADELAIDE

Hand-crafted Majolica cladding, consisting of four expertly matched, symmetrical elements.

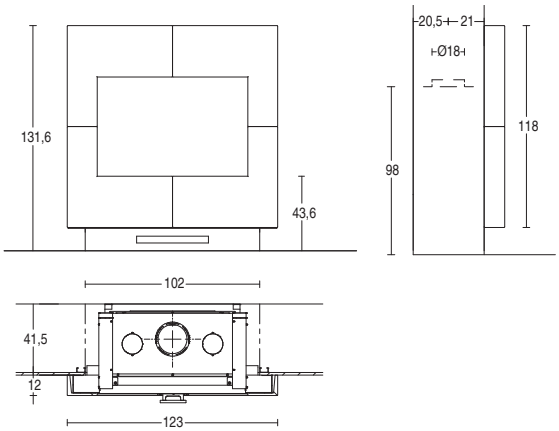

Ø Size should be checked during installation.

COLOUR	COMPATIBILITY	CODE	EURO
ARDESIA	MC 85/55 BL	P18066240C	3.140,00
BIANCO		P18066300C	3.140,00
BIANCO ANTICO		P18066640C	3.140,00
BIANCO GRIGIO		P18066410C	3.140,00
KAKI		P18066990C	3.140,00
MATTONE		P180664A0C	3.140,00
SAHARA		P18066220C	3.140,00
SENAPE		P180665A0C	3.140,00
TERRA COTTA		P18066090C	3.140,00
TORTORA		P180666A0C	3.140,00

If the Multifuoco System® is installed, you need to include vents in the false walling. The vents must be ordered separately.

ACCESSORIES ON REQUEST	
Accessories - Certified pipes and bends for connecting the flue	refer to the end of the section regarding the chosen interior

Prices are considered to be without sales taxes. Gruppo Piazzetta S.p.A. reserves the right to modify and/or delete all printed material, if deemed necessary by Gruppo Piazzetta without any written or prior notice.
Document reserved for the Gruppo Piazzetta S.p.A. sales organisation.

I VENEZIANI

AMBURGO

Hand-crafted Majolica cladding with bas-relief decorations. Profile in black-painted blasted Steel.

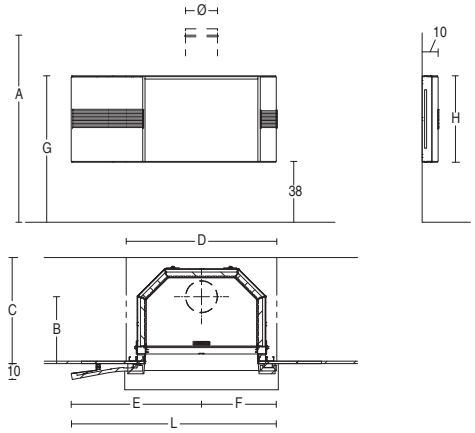

MOD.	A	B	C	D	E	F	G	L	H	Ø
MA 260 SL	156,5	42	64	90	81,5	46,5	91,5	128	54	20
MA 260 SL PLUS	196,5	42	74	100	81,5	46,5	91,5	128	54	20
MA 260 B SL	196,5	64	100	91,5	46,5	91,5	128	54	20	20
MA 263 SL	154	39,5	59	112	91,5	57	85	148,5	47,5	25
MA 263 SL PLUS	194	39,5	69	122	91,5	57	85	148,5	47,5	25

MOD.	A	B	C	D	E	F	G	L	H	Ø
MA 263 B SL PLUS	196	30	60,6	122	91,5	57	85	148,5	47,5	20
MA 264 SL	158,5	39,5	59	140	105,5	71	89	176,5	51,5	25
MC 70/51	91	38	58	97	81,5	46,5	91,5	128	54	18
MC 70/51 SL	91	42	62	97	81,5	46,5	91,5	128	54	18

MOD.	A	B	C	D	E	F	G	L	H	Ø
MC 90/44	84	38	58	117	91,5	57	85	148,5	47,5	20
MC 90/44 SL	84	42	62	117	91,5	57	85	148,5	47,5	20
MC 120/48	88	38	58	145	105,5	71	89	176,5	51,5	20
MC 120/48 SL	88	42	62	145	105,5	71	89	176,5	51,5	20

Ø Size should be checked during installation.

COLOUR	COMPATIBILITY	CODE	EURO
BIANCO ANTICO	MA 260 SL, MA 260 SL PLUS, MA 260 B SL, MC 70/51, MC 70/51 SL	P16001640C	1.060,00
	MA 263 SL, MA 263 SL PLUS, MA 263 B SL PLUS, MC 90/44, MC 90/44 SL	P16002640C	1.060,00
	MA 264 SL, MC 120/48, MC 120/48 SL	P16003640C	1.160,00
GIALLO ACCESO	MA 260 SL, MA 260 SL PLUS, MA 260 B SL, MC 70/51, MC 70/51 SL	P16001260C	1.060,00
	MA 263 SL, MA 263 SL PLUS, MA 263 B SL PLUS, MC 90/44, MC 90/44 SL	P16002260C	1.060,00
	MA 264 SL, MC 120/48, MC 120/48 SL	P16003260C	1.160,00
GRIGIO CERATO	MA 260 SL, MA 260 SL PLUS, MA 260 B SL, MC 70/51, MC 70/51 SL	P16001310C	1.060,00
	MA 263 SL, MA 263 SL PLUS, MA 263 B SL PLUS, MC 90/44, MC 90/44 SL	P16002310C	1.060,00
	MA 264 SL, MC 120/48, MC 120/48 SL	P16003310C	1.160,00
ROSSO LAVA	MA 260 SL, MA 260 SL PLUS, MA 260 B SL, MC 70/51, MC 70/51 SL	P16001450C	1.060,00
	MA 263 SL, MA 263 SL PLUS, MA 263 B SL PLUS, MC 90/44, MC 90/44 SL	P16002450C	1.060,00
	MA 264 SL, MC 120/48, MC 120/48 SL	P16003450C	1.160,00

If the Multifuoco System® is installed, you need to include vents in the false walling. The vents must be ordered separately.

ACCESSORIES ON REQUEST	CODE	EURO
LED Backlighting Kit for Majolica cladding.	P08015940C	175,00
Accessories - Certified pipes and bends for connecting the flue	refer to the end of the section regarding the chosen interior	

Prices are considered to be without sales taxes. Gruppo Piazzetta S.p.A. reserves the right to modify and/or delete all printed material, if deemed necessary by Gruppo Piazzetta without any written or prior notice.
Document reserved for the Gruppo Piazzetta S.p.A. sales organisation.

I VENEZIANI

ARCHEO

Hand-crafted clay cladding, blasted Steel profiles. The decorations, also in clay, are the result of expert craftsmanship. Every frame is a unique and unrepeatable item.

WOOD

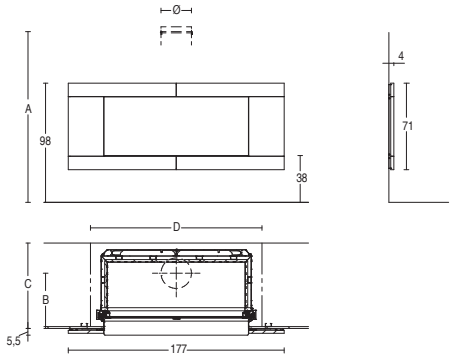

MOD.	A	B	C	D	Ø
MA 264 SL	158,5	39,5	59	140	25

MOD.	A	B	C	D	Ø
MC 120/48	88	38	58	145	20

Ø Size should be checked during installation.

COLOUR	COMPATIBILITY	CODE	EURO
LE TERRE	MA 264 SL [1], MC 120/48 [1]	P17052000C	6.555,00

If the Multifuoco System® is installed, you need to include vents in the false walling. The vents must be ordered separately.
[1] The compensation kit is required for installation with MA SL - MC.

OBLIGATORY ACCESSORIES	CODE	EURO
Compensation kit for MA264SL-MC120/48	P08013100C	430,00

ACCESSORIES ON REQUEST	
Accessories - Certified pipes and bends for connecting the flue	refer to the end of the section regarding the chosen interior

Prices are considered to be without sales taxes. Gruppo Piazzetta S.p.A. reserves the right to modify and/or delete all printed material, if deemed necessary by Gruppo Piazzetta without any written or prior notice.
Document reserved for the Gruppo Piazzetta S.p.A. sales organisation.

I VENEZIANI

BARCELLONA

Hand-crafted Majolica cladding with special items and side profiles in blasted Steel.

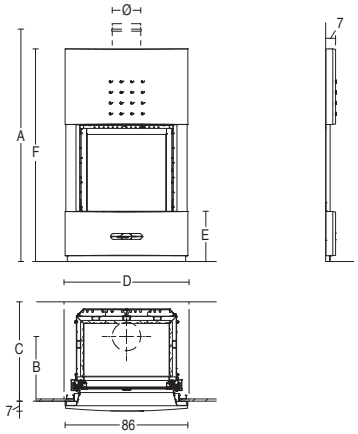

MOD.	A	B	C	D	E	F	Ø
MC 65/60	97	38	58	92	35	149	18
MC 65/60 P	143	38	58	92	35	149	18

MOD.	A	B	C	D	E	F	Ø
MC 65/60 SL	97	42	62	92	35	149	18

Ø Size should be checked during installation.

COLOUR	COMPATIBILITY	CODE	EURO
GRIGIO FERRO	MC 65/60, MC 65/60 P, MC 65/60 SL, MP 973[1], MP 973 TH, MP 973 TH ACS	P16053910C	1.575,00
MOKA		P16053890C	1.575,00
NEVE		P16053650C	1.575,00

The raised element includes slits that allow the hot air from the Multifuoco System® to come through. The vents are included in the cladding.

ACCESSORIES ON REQUEST	
Accessories - Certified pipes and bends for connecting the flue	refer to the end of the section regarding the chosen interior

Prices are considered to be without sales taxes. Gruppo Piazzetta S.p.A. reserves the right to modify and/or delete all printed material, if deemed necessary by Gruppo Piazzetta without any written or prior notice.
Document reserved for the Gruppo Piazzetta S.p.A. sales organisation.

I VENEZIANI

BREMA

Recessed cladding in hand-crafted Majolica, made in one piece, with bas-relief decorations. Profile and base in black-painted steel.
Optional, 1-metre modules available.

WOOD

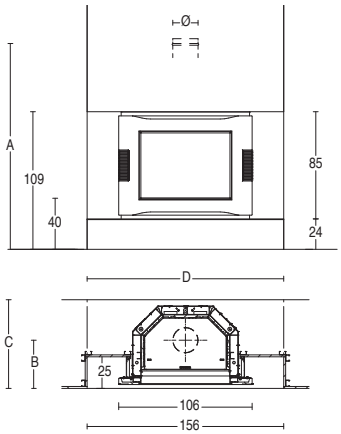

MOD.	A	B	C	D	Ø
MA 260 SL	159,5	45,8	68	155,8	20
MA 260 SL PLUS	199,5	45,8	78	165,8	20
MA 260 B SL	161,5	36,5	69,5	155,8	20

MOD.	A	B	C	D	Ø
MC 70/51	93	41,5	62	155,8	18
MC 70/51 SL	93	45,8	66	155,8	18

Ø Size should be checked during installation.

COLOUR	COMPATIBILITY	CODE	EURO
BIANCO GRIGIO	MA 260 SL, MA 260 SL PLUS, MA 260 B SL, MC 70/51, MC 70/51 SL	P16040410C	2.295,00
GIALLO ACCESO		P16040260C	2.295,00
GRIGIO CERATO		P16040310C	2.295,00
ROSSO LAVA		P16040450C	2.295,00

If the Multifuoco System® is installed, you need to include vents in the false walling. The vents must be ordered separately.

ACCESSORIES ON REQUEST	CODE	EURO
Modules for bases in black-painted Steel W 100 x D 25 cm	P08014730C	130,00
Accessories - Certified pipes and bends for connecting the flue	refer to the end of the section regarding the chosen interior	

Prices are considered to be without sales taxes. Gruppo Piazzetta S.p.A. reserves the right to modify and/or delete all printed material, if deemed necessary by Gruppo Piazzetta without any written or prior notice.
Document reserved for the Gruppo Piazzetta S.p.A. sales organisation.

I VENEZIANI

BRISTOL

Cladding with base made of a single unit in hand-crafted Majolica. Raised element and rear supports in marble that can be painted in a colour of your choice. Hood support in painted Steel.

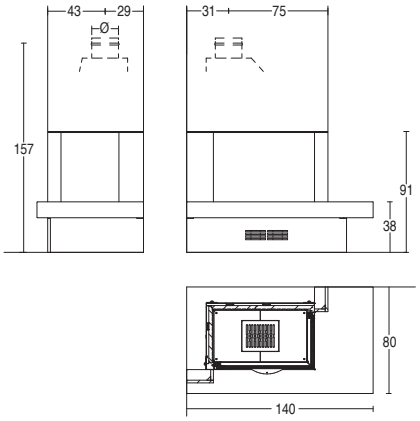

MOD.	A	Ø
MA 285 SL	157	20
MA 285 SL PLUS	197	25

Ø Size should be checked during installation.

RH VERSION

COLOUR	COMPATIBILITY	CODE	EURO
ARDESIA	MA 285 D SL, MA 285 D SL PLUS	P18057240C	2.550,00
BIANCO ANTICO		P18057640C	2.550,00
BIANCO GRIGIO		P18057410C	2.550,00
KAKI		P18057990C	2.550,00
MATTONE		P180574A0C	2.550,00
SAHARA		P18057220C	2.550,00
SENAPE		P180575A0C	2.550,00
TERRA COTTA		P18057090C	2.550,00
TORTORA		P180576A0C	2.550,00

LH VERSION

COLOUR	COMPATIBILITY	CODE	EURO
ARDESIA	MA 285 S SL, MA 285 S SL PLUS	P18056240C	2.550,00
BIANCO ANTICO		P18056640C	2.550,00
BIANCO GRIGIO		P18056410C	2.550,00
KAKI		P18056990C	2.550,00
MATTONE		P180564A0C	2.550,00
SAHARA		P18056220C	2.550,00
SENAPE		P180565A0C	2.550,00
TERRA COTTA		P18056090C	2.550,00
TORTORA		P180566A0C	2.550,00

ACCESSORIES ON REQUEST	
Accessories - Certified pipes and bends for connecting the flue	refer to the end of the section regarding the chosen interior

Prices are considered to be without sales taxes. Gruppo Piazzetta S.p.A. reserves the right to modify and/or delete all printed material, if deemed necessary by Gruppo Piazzetta without any written or prior notice.
Document reserved for the Gruppo Piazzetta S.p.A. sales organisation.

I VENEZIANI

BRISTOL WITH BENCH

Cladding with single unit base and bench in hand-crafted Majolica. Raised element and rear supports in marble that can be painted in a colour of your choice. Hood support in painted Steel.

WOOD

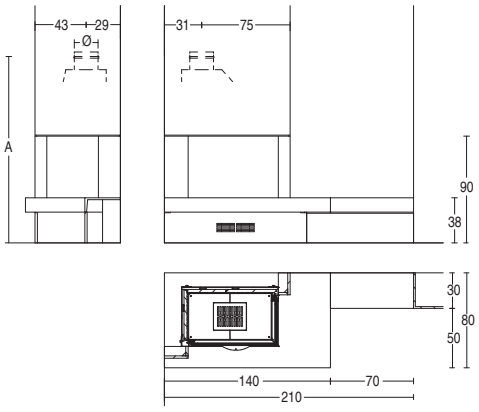

MOD.	A	Ø
MA 285 SL	157	20
MA 285 SL PLUS	197	25

Ø Size should be checked during installation.

RH VERSION (with LH bench)

COLOUR	COMPATIBILITY	CODE	EURO
ARDESIA	MA 285 D SL, MA 285 D SL PLUS	P18059240C	2.810,00
BIANCO ANTICO		P18059640C	2.810,00
BIANCO GRIGIO		P18059410C	2.810,00
KAKI		P18059990C	2.810,00
MATTONE		P180594A0C	2.810,00
SAHARA		P18059220C	2.810,00
SENAPE		P180595A0C	2.810,00
TERRA COTTA		P18059090C	2.810,00
TORTORA		P180596A0C	2.810,00

LH VERSION (with RH bench)

COLOUR	COMPATIBILITY	CODE	EURO
ARDESIA	MA 285 S SL, MA 285 S SL PLUS	P18058240C	2.810,00
BIANCO ANTICO		P18058640C	2.810,00
BIANCO GRIGIO		P18058410C	2.810,00
KAKI		P18058990C	2.810,00
MATTONE		P180584A0C	2.810,00
SAHARA		P18058220C	2.810,00
SENAPE		P180585A0C	2.810,00
TERRA COTTA		P18058090C	2.810,00
TORTORA		P180586A0C	2.810,00

ACCESSORIES ON REQUEST	
Accessories - Certified pipes and bends for connecting the flue	refer to the end of the section regarding the chosen interior

Prices are considered to be without sales taxes. Gruppo Piazzetta S.p.A. reserves the right to modify and/or delete all printed material, if deemed necessary by Gruppo Piazzetta without any written or prior notice.
Document reserved for the Gruppo Piazzetta S.p.A. sales organisation.

I VENEZIANI

CALAIS

Hand-crafted Majolica cladding with special items and side profiles in blasted Steel.

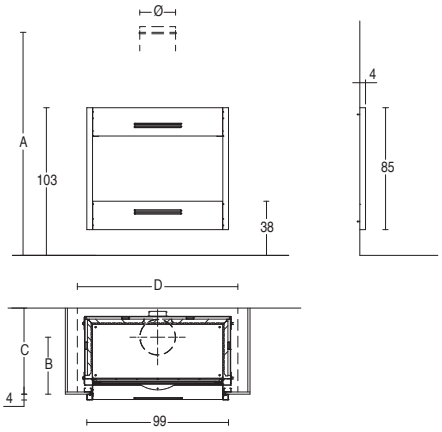

MOD.	A	B	C	D	Ø
MA 263 SL	154	40	59,5	112	25
MA 263 SL PLUS	194	40	69,5	122	25

MOD.	A	B	C	D	Ø
MA 263 B SL PLUS	194	30,3	61,6	122	20
MC 90/44	84	38,5	58,5	117	20

Ø Size should be checked during installation.

COLOUR	COMPATIBILITY	CODE	EURO
GRIGIO FERRO	MA 263 SL, MA 263 SL PLUS, MA 263 B SL PLUS, MC 90/44	P16052910C	1.460,00
MOKA		P16052890C	1.460,00
NEVE		P16052650C	1.460,00

If the Multifuoco System® is installed, you need to include vents in the false walling. The vents must be ordered separately.

ACCESSORIES ON REQUEST	
Accessories - Certified pipes and bends for connecting the flue	refer to the end of the section regarding the chosen interior

Prices are considered to be without sales taxes. Gruppo Piazzetta S.p.A. reserves the right to modify and/or delete all printed material, if deemed necessary by Gruppo Piazzetta without any written or prior notice.
Document reserved for the Gruppo Piazzetta S.p.A. sales organisation.

I VENEZIANI

CAMBRIDGE

Cladding with base in hand-crafted Majolica, both made in a single element. Profile in black-painted Steel.

WOOD

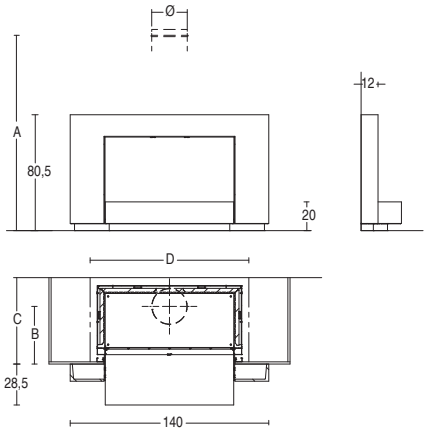

MOD.	A	B	C	D	Ø
MA 263 SL	136	40	59,5	112	25
MA 263 SL PLUS	176	40	69,5	122	25
MA 263 B SL PLUS	176	30,5	61,3	122	20

MOD.	A	B	C	D	Ø
MC 90/44	66	38,5	58,5	117	20
MC 90/44 SL	66	42,5	62,5	117	20

Ø Size should be checked during installation.

COLOUR	COMPATIBILITY	CODE	EURO
ARDESIA	MA 263 SL, MA 263 SL PLUS, MA 263 B SL PLUS, MC 90/44, MC 90/44 SL	P18048240C	2.980,00
BIANCO ANTICO		P18048640C	2.980,00
BIANCO GRIGIO		P18048410C	2.980,00
KAKI		P18048990C	2.980,00
MATTONE		P180484A0C	2.980,00
SAHARA		P18048220C	2.980,00
SENAPE		P180485A0C	2.980,00
TERRA COTTA		P18048090C	2.980,00
TORTORA		P180486A0C	2.980,00

Two-colour versions are available upon request. For further information, refer to the information at the beginning of section “I VENEZIANI”.
You cannot use the feet kit for the installation.

ACCESSORIES ON REQUEST	
Accessories - Certified pipes and bends for connecting the flue	refer to the end of the section regarding the chosen interior

Prices are considered to be without sales taxes. Gruppo Piazzetta S.p.A. reserves the right to modify and/or delete all printed material, if deemed necessary by Gruppo Piazzetta without any written or prior notice.
Document reserved for the Gruppo Piazzetta S.p.A. sales organisation.

I VENEZIANI

CANBERRA

Cladding in Majolica consisting of vertical and horizontal elements which come together and frame the fire. The vertical panel is enriched with bas-relief decorations, resulting from expert manual craftsmanship.

WOOD

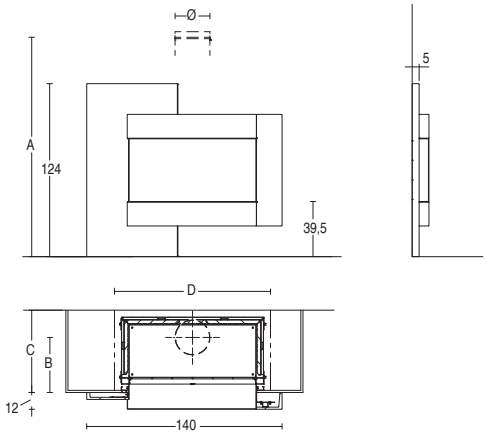

MOD.	A	B	C	D	Ø
MA 263 SL	157	39,5	59	112	25
MA 263 SL PLUS	197	39,5	69	122	25
MA 263 B SL PLUS	197	30,3	60,6	122	20

MOD.	A	B	C	D	Ø
MC 90/44	85,5	38	59	108,5	20
MC 90/44 SL	85,5	42	62	108	20

Ø Size should be checked during installation.

MONOCHROME VERSION

COLOUR	COMPATIBILITY	CODE	EURO
ARDESIA	MA 263 SL, MA 263 SL PLUS, MA 263 B SL PLUS, MC 90/44, MC 90/44 SL	P18071240C	2.285,00
BIANCO		P18071300C	2.285,00
BIANCO ANTICO		P18071640C	2.285,00
BIANCO GRIGIO		P18071410C	2.285,00
KAKI		P18071990C	2.285,00
MATTONE		P180714A0C	2.285,00
SAHARA		P18071220C	2.285,00
SENAPE		P180715A0C	2.285,00
TERRA COTTA		P18071090C	2.285,00
TORTORA		P180716A0C	2.285,00

BI-COLOUR VERSION [1]

COLOUR	COMPATIBILITY	CODE	EURO
LH PANEL SAHARA RH FRAME BIANCO ANTICO	MA 263 SL, MA 263 SL PLUS, MA 263 B SL PLUS, MC 90/44, MC 90/44 SL	P18071221C	2.285,00
LH PANEL TERRA COTTA RH FRAME BIANCO ANTICO		P18071091C	2.285,00
LH PANEL TORTORA RH FRAME BIANCO ANTICO		P180716A1C	2.285,00

[1] Other colour combinations are available upon request. For further information, refer to the information at the beginning of section “I VENEZIANI”.
If the Multifuoco System® is installed, you need to include vents in the false walling. The vents must be ordered separately.

ACCESSORIES ON REQUEST	
Accessories - Certified pipes and bends for connecting the flue	refer to the end of the section regarding the chosen interior

Prices are considered to be without sales taxes. Gruppo Piazzetta S.p.A. reserves the right to modify and/or delete all printed material, if deemed necessary by Gruppo Piazzetta without any written or prior notice.
Document reserved for the Gruppo Piazzetta S.p.A. sales organisation.

I VENEZIANI

CAPITAL

Hand-crafted cladding in Majolica, blasted Steel profiles. In the photo: Tortora enriched with decorations in Argento crystalline glaze.

WOOD

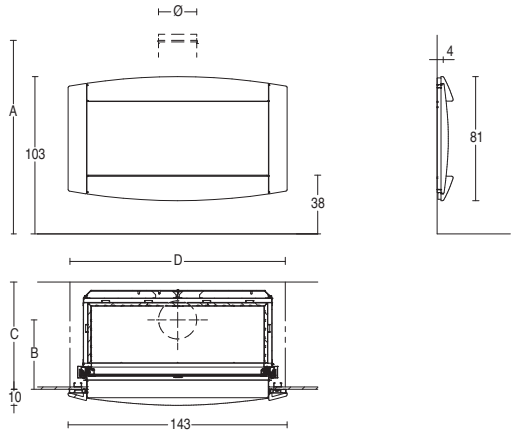

MOD.	A	B	C	D	Ø
MA 264 SL	158,5	39,5	59	140	25

MOD.	A	B	C	D	Ø
MC 120/48	88	38	58	145	20

Ø Size should be checked during installation.

BASIC LINE

COLOUR	COMPATIBILITY	CODE	EURO
ARDESIA	MA 264 SL [1], MC 120/48 [1]	P16095240C	2.175,00
BIANCO GRIGIO		P16095410C	2.175,00
BIANCO ANTICO		P16095640C	2.175,00
BIANCO		P16095300C	2.175,00
MATTONE		P160954A0C	2.175,00
KAKI		P16095990C	2.175,00
SAHARA		P16095220C	2.175,00
SENAPE		P160955A0C	2.175,00
TERRA COTTA		P16095090C	2.175,00
TORTORA		P160956A0C	2.175,00

ELEGANCE LINE

COLOUR	COMPATIBILITY	EURO
PENNELLATO	MA 264 SL [1], MC 120/48 [1]	3.255,00
PENNELLATO DECORATO		4.080,00
PENNELLATO DAMASCATO		4.495,00

LINEA LUXURY

COLOUR	COMPATIBILITY	EURO
ORO	MA 264 SL [1], MC 120/48 [1]	5.060,00
PLATINO		5.060,00
RAME		4.190,00
ORO DECORATO		5.885,00
PLATINO DECORATO		5.885,00
RAME DECORATO		5.015,00
ORO DAMASCATO		6.300,00
PLATINO DAMASCATO		6.300,00
RAME DAMASCATO		5.410,00

If the Multifuoco System® is installed, you need to include vents in the false walling. The vents must be ordered separately.
[1] The compensation kit is required for installation with MA SL - MC.

OBLIGATORY ACCESSORIES	CODE	EURO
Compensation kit for MA264SL-MC120/48	P08013100C	430,00

ACCESSORIES ON REQUEST	
Accessories - Certified pipes and bends for connecting the flue	refer to the end of the section regarding the chosen interior

Prices are considered to be without sales taxes. Gruppo Piazzetta S.p.A. reserves the right to modify and/or delete all printed material, if deemed necessary by Gruppo Piazzetta without any written or prior notice.
Document reserved for the Gruppo Piazzetta S.p.A. sales organisation.

I VENEZIANI

CHESTER

Cladding in hand-crafted Majolica, made in a single unit. Profile in black-painted Steel.

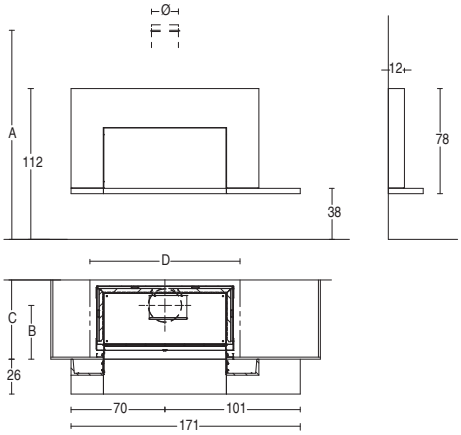

MOD.	A	B	C	D	Ø
MA 263 SL	154	40	59,5	112	25
MA 263 SL PLUS	194	40	69,5	122	25
MA 263 B SL PLUS	194	30	61	122	20

MOD.	A	B	C	D	Ø
MC 90/44	84	38,5	58,5	117	20
MC 90/44 SL	84	42,5	63,5	117	20

Ø Size should be checked during installation.

COLOUR	COMPATIBILITY	CODE	EURO
ARDESIA	MA 263 SL, MA 263 SL PLUS, MA 263 B SL PLUS, MC 90/44, MC 90/44 SL	P18040240C	3.395,00
BIANCO ANTICO		P18040640C	3.395,00
BIANCO GRIGIO		P18040410C	3.395,00
KAKI		P18040990C	3.395,00
MATTONE		P180404A0C	3.395,00
SAHARA		P18040220C	3.395,00
SENAPE		P180405A0C	3.395,00
TERRA COTTA		P18040090C	3.395,00
TORTORA		P180406A0C	3.395,00

Two-colour versions are available upon request. For further information, refer to the information at the beginning of section “I VENEZIANI”.
If the Multifuoco System® is installed, you need to include vents in the false walling. The vents must be ordered separately.

ACCESSORIES ON REQUEST	
Accessories - Certified pipes and bends for connecting the flue	refer to the end of the section regarding the chosen interior

Prices are considered to be without sales taxes. Gruppo Piazzetta S.p.A. reserves the right to modify and/or delete all printed material, if deemed necessary by Gruppo Piazzetta without any written or prior notice.
Document reserved for the Gruppo Piazzetta S.p.A. sales organisation.

I VENEZIANI

CITY

Cladding in hand-crafted Majolica, blasted Steel profiles. In the photo: Oro finish with decoration in Oro Damascato.

WOOD PELLET

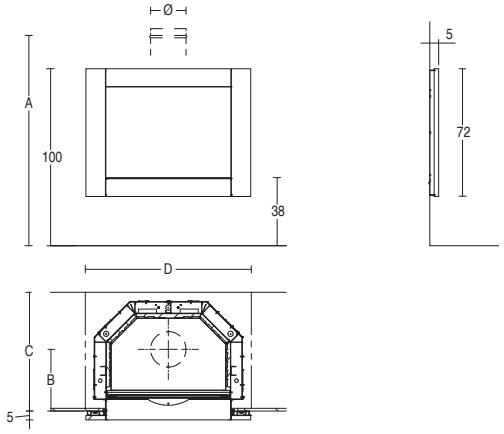

MOD.	A	B	C	D	Ø
MA 260 SL	157	42,5	64,5	90	20
MA 260 SL PLUS	197	42,5	74,5	100	20
MA 260 B SL	157	42,5	85	90	20

MOD.	A	B	C	D	Ø
MC 70/51	91	38,5	58,5	95	18
MC 70/51 SL	91	42,5	62,5	95	18
IP 7	80,5	44	54	78	8

MOD.	A	B	C	D	Ø
IP 7 M	80,5	44	54	78	8
MP 7	80,5	44	54	78	8

Ø Size should be checked during installation.

BASIC LINE

COLOUR	COMPATIBILITY	CODE	EURO
ARDESIA	MA 260 SL [2], MA 260 SL PLUS [2], MA 260 B SL [2] MC 70/51 [2], MC 70/51 SL [2], MP 7 [1], IP 7 [1], IP 7 M [1]	P16064240C	1.805,00
BIANCO GRIGIO		P16064410C	1.805,00
BIANCO ANTICO		P16064640C	1.805,00
BIANCO		P16064300C	1.805,00
MATTONE		P160644A0C	1.805,00
KAKI		P16064990C	1.805,00
SAHARA		P16064220C	1.805,00
SENAPE		P160645A0C	1.805,00
TERRA COTTA		P16064090C	1.805,00
TORTORA		P160646A0C	1.805,00

ELEGANCE LINE

COLOUR	COMPATIBILITY	EURO
PENNELLATO	MA 260 SL [2], MA 260 SL PLUS [2], MA 260 B SL [2] MC 70/51 [2], MC 70/51 SL [2], MP 7 [1], IP 7 [1], IP 7 M [1]	2.705,00
PENNELLATO DECORATO		3.515,00
PENNELLATO DAMASCATO		3.930,00

LINEA LUXURY

COLOUR	COMPATIBILITY	EURO
ORO	MA 260 SL [2], MA 260 SL PLUS [2], MA 260 B SL [2] MC 70/51 [2], MC 70/51 SL [2], MP 7 [1], IP 7 [1], IP 7 M [1]	4.290,00
PLATINO		4.290,00
RAME		3.515,00
ORO DECORATO		5.095,00
PLATINO DECORATO		5.095,00
RAME DECORATO		4.335,00
ORO DAMASCATO		5.515,00
PLATINO DAMASCATO		5.515,00
RAME DAMASCATO		4.745,00

If the Multifuoco System® is installed, you need to include vents in the false walling. The vents must be ordered separately.
[1] For installation with IP IP 7 - IP 7 M - MP, the compensation kit is essential. Incompatible with front pellet-loading tray.
[2] The compensation kit is required for installation with MA SL - MA SL PLUS - MC - MC SL.

OBLIGATORY ACCESSORIES	CODE	EURO
Compensation kit for MA260SL-MA260SLPLUS-MA260BSL-MC70/51-MC70/51SL	P08013730C	430,00
Compensation kit for IP 7, NOT compatible with front pellet-loading tray	N08010021C	100,00
Compensation kit for IP 7 M - MP 7, NOT compatible with front pellet-loading tray	N08010033C	100,00

ACCESSORIES ON REQUEST	
Accessories - Certified pipes and bends for connecting the flue	refer to the end of the section regarding the chosen interior

Prices are considered to be without sales taxes. Gruppo Piazzetta S.p.A. reserves the right to modify and/or delete all printed material, if deemed necessary by Gruppo Piazzetta without any written or prior notice.
Document reserved for the Gruppo Piazzetta S.p.A. sales organisation.

I VENEZIANI

CLASS

Hand-crafted Majolica cladding with base, front piece and profiles in blasted Steel.

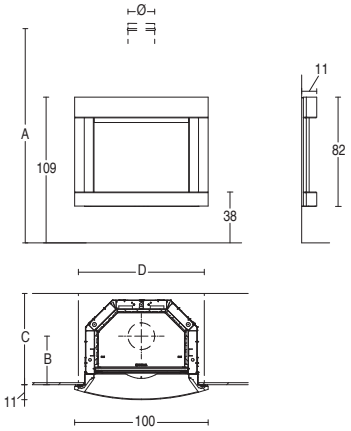

MOD.	A	B	C	D	Ø
MA 260 SL	156,5	44	66	90	20
MA 260 SL PLUS	196,5	44	76	100	20
MA 260 B SL	153	34,8	69,6	91,5	20

MOD.	A	B	C	D	Ø
MC 70/51	91	40	60	94	18
MC 70/51 SL	91	44	64	94	18

Ø Size should be checked during installation.

COLOUR	COMPATIBILITY	CODE	EURO
GRIGIO FERRO	MA 260 SL, MA 260 SL PLUS, MA 260 B SL, MC 70/51, MC 70/51 SL	P16079910C	1.825,00
MOKA		P16079890C	1.970,00
NEVE		P16079650C	1.825,00

If the Multifuoco System® is installed, you need to include vents in the false walling. The vents must be ordered separately.

ACCESSORIES ON REQUEST	
Accessories - Certified pipes and bends for connecting the flue	refer to the end of the section regarding the chosen interior

Prices are considered to be without sales taxes. Gruppo Piazzetta S.p.A. reserves the right to modify and/or delete all printed material, if deemed necessary by Gruppo Piazzetta without any written or prior notice.
Document reserved for the Gruppo Piazzetta S.p.A. sales organisation.

I VENEZIANI

COLONIA

Hand-crafted Majolica cladding with bas-relief decorations. Profile in black- or grey-painted Steel.

WOOD PELLET THERMO

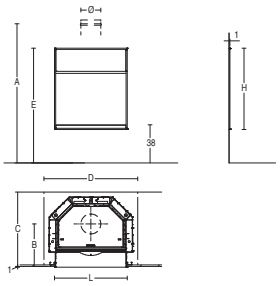

MOD.	A	B	C	D	E	L	H	Ø
MA 260 SL	156,5	50,2	72,2	90	115	73	81,5	20
MA 260 SL PLUS	196,5	50,2	82,2	100	115	73	81,5	20
MA 260 B SL	159	41	72,2	91,5	115	73	81,5	20
MA 263 SL	154	47,7	67,2	112,5	108	93	74,5	25
MA 263 SL PLUS	194	47,7	77,2	122,5	108	93	74,5	25
MA 263 B SL PLUS	196	38,5	67,2	122,5	108	93	74,5	20

MOD.	A	B	C	D	E	L	H	Ø
MA 264 SL	158,5	47,7	67,2	140,5	112,5	121	79	25
MC 65/60	100	46	66,2	92	124	68	90,5	18
MC 65/60 P	146	46	66,2	92	124	68	90,5	18
MC 65/60 SL	100	50	70,2	92	124	68	90,5	18
MC 70/51	91	46	66,2	97	115	73	81,5	18

MOD.	A	B	C	D	E	L	H	Ø
MC 70/51 SL	91	50	70,2	97	115	73	81,5	18
MC 90/44	84	46	66,2	117	108	93	74,5	20
MC 90/44 SL	84	50	70,2	117	108	93	74,5	20
MC 120/48	88	46	66,2	145	112,5	121	79	20
MC 120/48 SL	88	50	70,2	145	112,5	121	79	20
MP 973 TH	33	63	80	105	124	68	90,5	10

Ø Size should be checked during installation.

COLOUR	COMPATIBILITY	CODE	EURO
BIANCO GRIGIO	MA 260 SL, MA 260 SL PLUS, MA 260 B SL, MC 70/51, MC 70/51 SL	P16026410C	620,00
	MC 65/60, MC 65/60 P, MC 65/60 SL, MP 973 TH[1], MP 973 TH ACS	P16024410C	620,00
	MA 263 SL, MA 263 SL PLUS, MA 263 B SL PLUS, MC 90/44, MC 90/44 SL	P16023410C	620,00
	MA 264 SL, MC 120/48, MC 120/48 SL	P16025410C	675,00
GIALLO ACCESO	MA 260 SL, MA 260 SL PLUS, MA 260 B SL, MC 70/51, MC 70/51 SL	P16026260C	620,00
	MC 65/60, MC 65/60 P, MC 65/60 SL, MP 973 TH[1], MP 973 TH ACS	P16024260C	620,00
	MA 263 SL, MA 263 SL PLUS, MA 263 B SL PLUS, MC 90/44, MC 90/44 SL	P16023260C	620,00
	MA 264 SL, MC 120/48, MC 120/48 SL	P16025260C	675,00
GRIGIO CERATO	MA 260 SL, MA 260 SL PLUS, MA 260 B SL, MC 70/51, MC 70/51 SL	P16026310C	620,00
	MC 65/60, MC 65/60 P, MC 65/60 SL, MP 973 TH[1], MP 973 TH ACS	P16024310C	620,00
	MA 263 SL, MA 263 SL PLUS, MA 263 B SL PLUS, MC 90/44, MC 90/44 SL	P16023310C	620,00
	MA 264 SL, MC 120/48, MC 120/48 SL	P16025310C	675,00
ROSSO LAVA	MA 260 SL, MA 260 SL PLUS, MA 260 B SL, MC 70/51, MC 70/51 SL	P16026450C	620,00
	MC 65/60, MC 65/60 P, MC 65/60 SL, MP 973 TH[1], MP 973 TH ACS	P16024450C	620,00
	MA 263 SL, MA 263 SL PLUS, MA 263 B SL PLUS, MC 90/44, MC 90/44 SL	P16023450C	620,00
	MA 264 SL, MC 120/48, MC 120/48 SL	P16025450C	675,00
GREY--PAINTED FRAME	MA 260 SL, MA 260 SL PLUS, MA 260 B SL, MC 70/51, MC 70/51 SL	P08015030C	350,00
	MC 65/60, MC 65/60 P, MC 65/60 SL, MP 973 TH[1], MP 973 TH ACS	P08015040C	350,00
	MA 263 SL, MA 263 SL PLUS, MA 263 B SL PLUS, MC 90/44, MC 90/44 SL	P08015080C	350,00
	MA 264 SL, MC 120/48, MC 120/48 SL	P08015060C	350,00
BLACK-PAINTED FRAME	MA 260 SL, MA 260 SL PLUS, MA 260 B SL, MC 70/51, MC 70/51 SL	P08015020C	350,00
	MC 65/60, MC 65/60 P, MC 65/60 SL, MP 973 TH[1], MP 973 TH ACS	P08015050C	350,00
	MA 263 SL, MA 263 SL PLUS, MA 263 B SL PLUS, MC 90/44, MC 90/44 SL	P08015090C	350,00
	MA 264 SL, MC 120/48, MC 120/48 SL	P08015070C	350,00

If the Multifuoco System® is installed, you need to include vents in the false walling. The vents must be ordered separately.

ACCESSORIES ON REQUEST	
Accessories - Certified pipes and bends for connecting the flue	refer to the end of the section regarding the chosen interior

Prices are considered to be without sales taxes. Gruppo Piazzetta S.p.A. reserves the right to modify and/or delete all printed material, if deemed necessary by Gruppo Piazzetta without any written or prior notice.
Document reserved for the Gruppo Piazzetta S.p.A. sales organisation.

I VENEZIANI

COLORADO

Hand-crafted Majolica cladding with special items and side profiles in black-painted Steel.

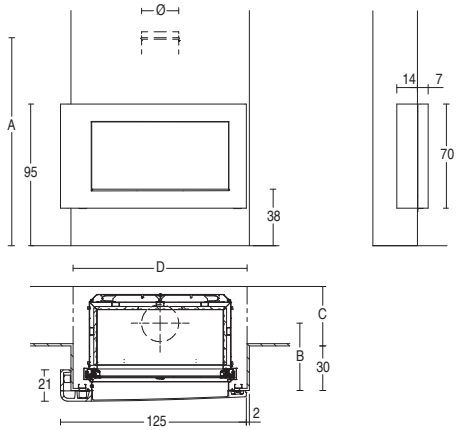

MOD.	A	B	C	D	Ø
MA 263 SL	154	39,5	29	120	25
MA 263 SL PLUS	194	39,5	39	130	25
MA 263 B SL PLUS	194	30,3	30,6	130	20

MOD.	A	B	C	D	Ø
MC 90/44	84	38	28	120	20
MC 90/44 SL	84	42	32	120	20

Ø Size should be checked during installation.

RH VERSION

COLOUR	COMPATIBILITY	CODE	EURO
GRIGIO FERRO	MA 263 SL [1], MA 263 SL PLUS [1], MA 263 B SL PLUS [1], MC 90/44, MC 90/44 SL	P16056910C	1.235,00
MOKA		P16056890C	1.355,00
NEVE		P16056650C	1.235,00

LH VERSION

COLOUR	COMPATIBILITY	CODE	EURO
GRIGIO FERRO	MA 263 SL [1], MA 263 SL PLUS [1], MA 263 B SL PLUS [1], MC 90/44, MC 90/44 SL	P16059910C	1.235,00
MOKA		P16059890C	1.355,00
NEVE		P16059650C	1.235,00

If the Multifuoco System® is installed, you need to include vents in the false walling. The vents must be ordered separately.
[1] The compensation kit is required for the versions with MA.

OBLIGATORY ACCESSORIES	CODE	EURO
Compensation kit for MA263SL-MA263SLPLUS-MA263BSLPLUS-MC90/44-MC90/44P-MC90/44SL	P08016060C	300,00

ACCESSORIES ON REQUEST	
Accessories - Certified pipes and bends for connecting the flue	refer to the end of the section regarding the chosen interior

Prices are considered to be without sales taxes. Gruppo Piazzetta S.p.A. reserves the right to modify and/or delete all printed material, if deemed necessary by Gruppo Piazzetta without any written or prior notice.
Document reserved for the Gruppo Piazzetta S.p.A. sales organisation.

I VENEZIANI

COLUMBIA

Cladding in hand-crafted Majolica, blasted Steel profiles. In the photo: Bianco Setolato enriched with brush stroke detailing in Argento crystalline glaze on the side panel.

WOOD

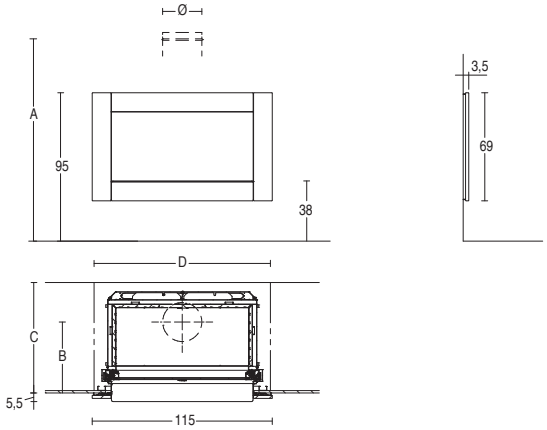

MOD.	A	B	C	D	Ø
MA 263 SL	154	39,5	59	112	25
MA 263 SL PLUS	194	39,5	69	122	25
MA 263 B SL PLUS	194	30,3	60,6	122	20

MOD.	A	B	C	D	Ø
MC 90/44	84	38	58	117	20
MC 90/44 SL	84	42	62	117	20

Ø Size should be checked during installation.

BASIC LINE

COLOUR	COMPATIBILITY	CODE	EURO
ARDESIA	MA 263 SL [1], MA 263 SL PLUS [1], MA 263 B SL PLUS [1], MC 90/44 [1], MC 90/44 SL [1]	P16013240C	1.825,00
BIANCO GRIGIO		P16013410C	1.825,00
BIANCO ANTICO		P16013640C	1.825,00
BIANCO		P16013300C	1.825,00
MATTONE		P160134A0C	1.825,00
KAKI		P16013990C	1.825,00
SAHARA		P16013220C	1.825,00
SENAPE		P160135A0C	1.825,00
TERRA COTTA		P16013090C	1.825,00
TORTORA		P160136A0C	1.825,00

ELEGANCE LINE

COLOUR	COMPATIBILITY	EURO
PENNELLATO	MA 263 SL [1], MA 263 SL PLUS [1], MA 263 B SL PLUS [1], MC 90/44 [1], MC 90/44 SL [1]	2.760,00
PENNELLATO DECORATO		3.730,00
PENNELLATO DAMASCATO		4.150,00

LINEA LUXURY

COLOUR	COMPATIBILITY	EURO
ORO	MA 263 SL [1], MA 263 SL PLUS [1], MA 263 B SL PLUS [1], MC 90/44 [1], MC 90/44 SL [1]	4.520,00
PLATINO		4.520,00
RAME		3.665,00
ORO DECORATO		5.500,00
PLATINO DECORATO		5.500,00
RAME DECORATO		4.645,00
ORO DAMASCATO		5.915,00
PLATINO DAMASCATO		5.915,00
RAME DAMASCATO		5.060,00

If the Multifuoco System® is installed, you need to include vents in the false walling. The vents must be ordered separately.
[1] The compensation kit is required for installation with MA SL - MC - MC SL.

OBLIGATORY ACCESSORIES	CODE	EURO
Compensation kit for MA263SL-MA263SLPLUS-MA263BSLPLUS-MC90/44-MC90/44SL	P08012840C	430,00

ACCESSORIES ON REQUEST	
Accessories - Certified pipes and bends for connecting the flue	refer to the end of the section regarding the chosen interior

Prices are considered to be without sales taxes. Gruppo Piazzetta S.p.A. reserves the right to modify and/or delete all printed material, if deemed necessary by Gruppo Piazzetta without any written or prior notice.
Document reserved for the Gruppo Piazzetta S.p.A. sales organisation.

I VENEZIANI

CRUISE

Wood-burning fireplace lined with large handmade Majolica panels. In the photo: Oro Damascato finish. Base, front piece and profiles in blasted Steel.

WOOD

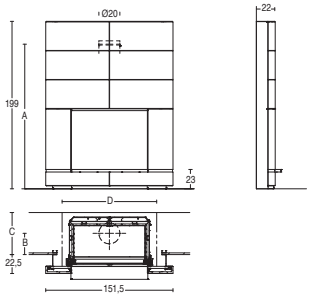

MOD.	A	B	C	D	Ø
MA 262 SL	166,5	19,5	39	122	25

MOD.	A	B	C	D	Ø
MA 262 SL PLUS	192,5	19,5	44	132	25

Ø Size should be checked during installation.

BASIC LINE

COLOUR	COMPATIBILITY	CODE	EURO
ARDESIA	MA 262 SL, MA 262 SL PLUS	P16088240C	2.475,00
BIANCO GRIGIO		P16088410C	2.475,00
BIANCO ANTICO		P16088640C	2.475,00
BIANCO		P16088300C	2.475,00
MATTONE		P160884A0C	2.475,00
KAKI		P16088990C	2.475,00
SAHARA		P16088220C	2.475,00
SENAPE		P160885A0C	2.475,00
TERRA COTTA		P16088090C	2.475,00
TORTORA		P160886A0C	2.475,00

ELEGANCE LINE

COLOUR	COMPATIBILITY	EURO
PENNELLATO	MA 262 SL, MA 262 SL PLUS	3.720,00
PENNELLATO DECORATO		6.920,00
PENNELLATO DAMASCATO		7.255,00

LINEA LUXURY

COLOUR	COMPATIBILITY	EURO
ORO	MA 262 SL, MA 262 SL PLUS	7.775,00
PLATINO		7.775,00
RAME		5.830,00
ORO DECORATO		10.980,00
PLATINO DECORATO		10.980,00
RAME DECORATO		9.025,00
ORO DAMASCATO		11.305,00
PLATINO DAMASCATO		11.305,00
RAME DAMASCATO		9.355,00

If the Multifuoco System® is installed, you need to include vents in the false walling. The vents must be ordered separately.

OBLIGATORY ACCESSORIES	CODE	EURO
Special CRUISE items in steel	P08013240C	5.240,00

ACCESSORIES ON REQUEST	
Accessories - Certified pipes and bends for connecting the flue	refer to the end of the section regarding the chosen interior

Prices are considered to be without sales taxes. Gruppo Piazzetta S.p.A. reserves the right to modify and/or delete all printed material, if deemed necessary by Gruppo Piazzetta without any written or prior notice.
Document reserved for the Gruppo Piazzetta S.p.A. sales organisation.

I VENEZIANI

DARWIN

Cladding in Majolica, consisting of elements in various sizes which enclose the fire. The bas-relief decorations are hand-made and enrich and enhance the Majolica with an original and exclusive design.

WOOD

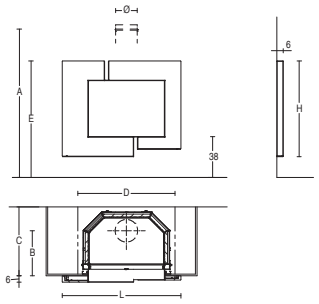

MOD.	A	B	C	D	L	E	H	Ø
MA 260 SL	159	42	64	90	110	108	89	20
MA 260 SL PLUS	199	42	74	100	110	108	89	20
MA 260 B SL	159	32,8	65,6	91,5	110	108	89	20

MOD.	A	B	C	D	L	E	H	Ø
MC 65/60	100	38	58	92	106	117	98	18
MC 65/60 P	146	38	58	92	106	117	98	18
MC 65/60 SL	100	42	62	92	106	117	98	18

MOD.	A	B	C	D	L	E	H	Ø
MC 70/51	91	38	59	95	110	108	89	18
MC 70/51 SL	91	42	62	95	110	108	89	18

Ø Size should be checked during installation.

MONOCHROME VERSION

COLOUR	COMPATIBILITY	CODE	EURO
ARDESIA	MA 260 SL, MA 260 SL PLUS, MA 260 B SL, MC 70/51, MC 70/51 SL	P18072240C	2.840,00
	MC 65/60, MC 65/60 P, MC 65/60 SL	P18052240C	2.840,00
BIANCO	MA 260 SL, MA 260 SL PLUS, MA 260 B SL, MC 70/51, MC 70/51 SL	P18072300C	2.840,00
	MC 65/60, MC 65/60 P, MC 65/60 SL	P18052300C	2.840,00
BIANCO ANTICO	MA 260 SL, MA 260 SL PLUS, MA 260 B SL, MC 70/51, MC 70/51 SL	P18072640C	2.840,00
	MC 65/60, MC 65/60 P, MC 65/60 SL	P18052640C	2.840,00
BIANCO GRIGIO	MA 260 SL, MA 260 SL PLUS, MA 260 B SL, MC 70/51, MC 70/51 SL	P18072410C	2.840,00
	MC 65/60, MC 65/60 P, MC 65/60 SL	P18052410C	2.840,00
KAKI	MA 260 SL, MA 260 SL PLUS, MA 260 B SL, MC 70/51, MC 70/51 SL	P18072990C	2.840,00
	MC 65/60, MC 65/60 P, MC 65/60 SL	P18052990C	2.840,00
MATTONE	MA 260 SL, MA 260 SL PLUS, MA 260 B SL, MC 70/51, MC 70/51 SL	P180724A0C	2.840,00
	MC 65/60, MC 65/60 P, MC 65/60 SL	P180524A0C	2.840,00
SAHARA	MA 260 SL, MA 260 SL PLUS, MA 260 B SL, MC 70/51, MC 70/51 SL	P18072220C	2.840,00
	MC 65/60, MC 65/60 P, MC 65/60 SL	P18052220C	2.840,00
SENAPE	MA 260 SL, MA 260 SL PLUS, MA 260 B SL, MC 70/51, MC 70/51 SL	P180725A0C	2.840,00
	MC 65/60, MC 65/60 P, MC 65/60 SL	P180525A0C	2.840,00
TERRA COTTA	MA 260 SL, MA 260 SL PLUS, MA 260 B SL, MC 70/51, MC 70/51 SL	P18072090C	2.840,00
	MC 65/60, MC 65/60 P, MC 65/60 SL	P18052090C	2.840,00
TORTORA	MA 260 SL, MA 260 SL PLUS, MA 260 B SL, MC 70/51, MC 70/51 SL	P180726A0C	2.840,00
	MC 65/60, MC 65/60 P, MC 65/60 SL	P180526A0C	2.840,00

BI-COLOUR VERSION [1]

COLOUR	COMPATIBILITY	CODE	EURO
LH FRAME SAHARA RH FRAME BIANCO GRIGIO	MA 260 SL, MA 260 SL PLUS, MA 260 B SL, MC 70/51, MC 70/51 SL	P18072221C	2.840,00
	MC 65/60, MC 65/60 P, MC 65/60 SL	P18052221C	2.840,00
LH FRAME TERRA COTTA RH FRAME BIANCO GRIGIO	MA 260 SL, MA 260 SL PLUS, MA 260 B SL, MC 70/51, MC 70/51 SL	P18072091C	2.840,00
	MC 65/60, MC 65/60 P, MC 65/60 SL	P18052091C	2.840,00
LH FRAME TORTORA RH FRAME BIANCO GRIGIO	MA 260 SL, MA 260 SL PLUS, MA 260 B SL, MC 70/51, MC 70/51 SL	P180726A1C	2.840,00
	MC 65/60, MC 65/60 P, MC 65/60 SL	P180526A1C	2.840,00

If the Multifuoco System® is installed, you need to include vents in the false walling. The vents must be ordered separately.

[1] Other colour combinations are available upon request. For further information, refer to the information at the beginning of section "I VENEZIANI".

ACCESSORIES ON REQUEST	
Accessories - Certified pipes and bends for connecting the flue	refer to the end of the section regarding the chosen interior

Prices are considered to be without sales taxes. Gruppo Piazzetta S.p.A. reserves the right to modify and/or delete all printed material, if deemed necessary by Gruppo Piazzetta without any written or prior notice.
Document reserved for the Gruppo Piazzetta S.p.A. sales organisation.

I VENEZIANI

DARWIN

Cladding in Majolica, consisting of elements in various sizes which enclose the fire. The bas-relief decorations are hand-made and enrich and enhance the Majolica with an original and exclusive design.

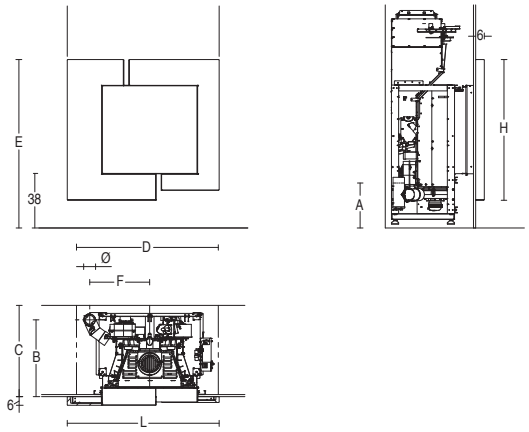

MOD.	A	B	C	D	E	F	L	H	Ø
MP 973 TH	34	55,5	73	105	117	38	106	98	10

MOD.	A	B	C	D	E	F	L	H	Ø
IP 7	80,5	44	54	82	108	27,5	110	89	8
IP 7 M	80,5	44	54	82	108	27,5	110	89	8

MOD.	A	B	C	D	E	F	L	H	Ø
MP 7	80,5	44	54	82	108	27,5	110	89	8

Ø Size should be checked during installation.

MONOCHROME VERSION

COLOUR	COMPATIBILITY	CODE	EURO
ARDESIA	IP 7 [1], IP 7 M[1], MP 7 [1]	P18072240C	2.840,00
	MP 973 TH, MP 973 TH ACS	P18052240C	2.840,00
BIANCO	IP 7 [1], IP 7 M[1], MP 7 [1]	P18072300C	2.840,00
	MP 973 TH, MP 973 TH ACS	P18052300C	2.840,00
BIANCO ANTICO	IP 7 [1], IP 7 M[1], MP 7 [1]	P18072640C	2.840,00
	MP 973 TH, MP 973 TH ACS	P18052640C	2.840,00
BIANCO GRIGIO	IP 7 [1], IP 7 M[1], MP 7 [1]	P18072410C	2.840,00
	MP 973 TH, MP 973 TH ACS	P18052410C	2.840,00
KAKI	IP 7 [1], IP 7 M[1], MP 7 [1]	P18072990C	2.840,00
	MP 973 TH, MP 973 TH ACS	P18052990C	2.840,00
MATTONE	IP 7 [1], IP 7 M[1], MP 7 [1]	P180724A0C	2.840,00
	MP 973 TH, MP 973 TH ACS	P180524A0C	2.840,00
SAHARA	IP 7 [1], IP 7 M[1], MP 7 [1]	P18072220C	2.840,00
	MP 973 TH, MP 973 TH ACS	P18052220C	2.840,00
SENAPE	IP 7 [1], IP 7 M[1], MP 7 [1]	P180725A0C	2.840,00
	MP 973 TH, MP 973 TH ACS	P180525A0C	2.840,00
TERRA COTTA	IP 7 [1], IP 7 M[1], MP 7 [1]	P18072090C	2.840,00
	MP 973 TH, MP 973 TH ACS	P18052090C	2.840,00
TORTORA	IP 7 [1], IP 7 M[1], MP 7 [1]	P180726A0C	2.840,00
	MP 973 TH, MP 973 TH ACS	P180526A0C	2.840,00

BI-COLOUR VERSION [2]

COLOUR	COMPATIBILITY	CODE	EURO
LH FRAME SAHARA RH FRAME BIANCO GRIGIO	IP 7 [1], IP 7 M[1], MP 7 [1]	P18072221C	2.840,00
	MP 973 TH, MP 973 TH ACS	P18052221C	2.840,00
LH FRAME TERRA COTTA RH FRAME BIANCO GRIGIO	IP 7 [1], IP 7 M[1], MP 7 [1]	P18072091C	2.840,00
	MP 973 TH, MP 973 TH ACS	P18052091C	2.840,00
LH FRAME TORTORA RH FRAME BIANCO GRIGIO	IP 7 [1], IP 7 M[1], MP 7 [1]	P180726A1C	2.840,00
	MP 973 TH, MP 973 TH ACS	P180526A1C	2.840,00

If the Multifuoco System® is installed, you need to include vents in the false walling. The vents must be ordered separately.

[1] For installation with IP 7 - IP 7 M - MP 7, the compensation kit is essential.

[2] Other colour combinations are available upon request. For further information, refer to the information at the beginning of section "I VENEZIANI".

OBLIGATORY ACCESSORIES	CODE	EURO
Compensation kit for IP 7, NOT compatible with front pellet-loading tray	N08010021C	100,00
Compensation kit for IP 7 M - MP 7, NOT compatible with front pellet-loading tray	N08010033C	100,00

ACCESSORIES ON REQUEST	
Accessories - Certified pipes and bends for connecting the flue	refer to the end of the section regarding the chosen interior

Prices are considered to be without sales taxes. Gruppo Piazzetta S.p.A. reserves the right to modify and/or delete all printed material, if deemed necessary by Gruppo Piazzetta without any written or prior notice.
Document reserved for the Gruppo Piazzetta S.p.A. sales organisation.

I VENEZIANI

DRESDA

Hand-crafted Majolica cladding with bas-relief decorations. Not reversible.

WOOD PELLET

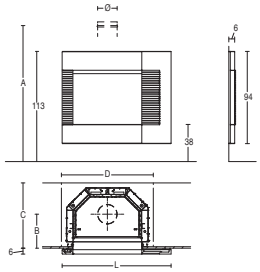

MOD.	A	B	C	D	L	Ø
MA 260 SL	156,5	42	64,5	90	111	20
MA 260 SL PLUS	196,5	42	74,5	100	111	20
MA 260 B SL	158,5	33,3	66,6	91,5	111	20
MA 261 SL	164,5	54,5	77	101	121	25

MOD.	A	B	C	D	L	Ø
MA 261 SL PLUS	204,5	54,5	87	111	121	25
MC 70/51	91	38,5	58,5	97	111	18
MC 70/51 SL	91	42,5	62,5	97	111	18

MOD.	A	B	C	D	L	Ø
IP 7	80,5	44	54	82	121	8
IP 7 M	80,5	44	54	82	121	8
MP 7	80,5	44	54	82	121	8

Ø Size should be checked during installation.

COLOUR	COMPATIBILITY	CODE	EURO
BIANCO GRIGIO	MA 260 SL, MA 260 SL PLUS, MA 260 B SL, MC 70/51, MC 70/51 SL	P18012410C	1.745,00
	MA 261 SL, MA 261 SL PLUS, MP 7 [1], IP 7 [1], IP 7 M [1]	P18013410C	1.745,00
GRIGIO CERATO	MA 260 SL, MA 260 SL PLUS, MA 260 B SL, MC 70/51, MC 70/51 SL	P18012310C	1.745,00
	MA 261 SL, MA 261 SL PLUS, MP 7 [1], IP 7 [1], IP 7 M [1]	P18013310C	1.745,00
GRIGIO FERRO	MA 260 SL, MA 260 SL PLUS, MA 260 B SL, MC 70/51, MC 70/51 SL	P18012910C	1.745,00
	MA 261 SL, MA 261 SL PLUS, MP 7 [1], IP 7 [1], IP 7 M [1]	P18013910C	1.745,00
ROSSO LAVA	MA 260 SL, MA 260 SL PLUS, MA 260 B SL, MC 70/51, MC 70/51 SL	P18012450C	1.745,00
	MA 261 SL, MA 261 SL PLUS, MP 7 [1], IP 7 [1], IP 7 M [1]	P18013450C	1.745,00

If the Multifuoco System® is installed, you need to include vents in the false walling. The vents must be ordered separately.
[1] For installation with IP 7 - IP 7 M - MP 7, the compensation kit is essential.

OBLIGATORY ACCESSORIES	CODE	EURO
Compensation kit for IP 7, compatible with front pellet-loading tray	N08010022C	125,00
Compensation kit for IP 7 M - MP 7, compatible with front pellet-loading tray	N08010034C	125,00

ACCESSORIES ON REQUEST	
Accessories - Certified pipes and bends for connecting the flue	refer to the end of the section regarding the chosen interior

Prices are considered to be without sales taxes. Gruppo Piazzetta S.p.A. reserves the right to modify and/or delete all printed material, if deemed necessary by Gruppo Piazzetta without any written or prior notice.
Document reserved for the Gruppo Piazzetta S.p.A. sales organisation.

I VENEZIANI

EASY Cladding in hand-crafted Majolica.

WOOD

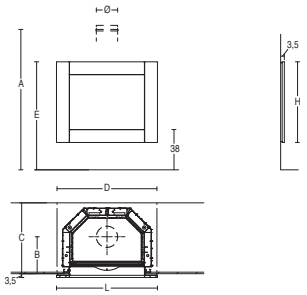

MOD.	A	B	C	D	E	L	H	Ø
MA 260 SL	157	42,5	64,5	90	102	95	76	20
MA 260 SL PLUS	197	42,5	74,5	100	102	95	76	20
MA 260 B SL	157	42,5	85	90	102	95	76	25
MA 261 SL	165	54,5	77	101	106	104,5	80	25
MA 261 SL PLUS	205	54,5	87	111	106	104,5	80	25
MA 262 SL	182	40	59,5	112,5	121	115	95	25
MA 262 SL PLUS	208	40	64,5	122,5	121	115	95	25
MA 263 SL	156	40	59,5	112,5	95	115	69,5	25

MOD.	A	B	C	D	E	L	H	Ø
MA 263 SL PLUS	196	40	69,5	122,5	95	115	69,5	25
MA 263 B SL PLUS	196	40	80	122,5	95	115	69,5	25
MA 264 SL	160	40	59,5	140,5	99	143	73	25
MC 65/60	100	38,5	58,5	92	111	90	85	18
MC 65/60 P	146	38,5	58,5	92	111	90	85	18
MC 65/60 SL	100	42,5	62,5	92	111	90	85	18

MOD.	A	B	C	D	E	L	H	Ø
MC 70/51	91	38,5	58,5	95	102	95	76	18
MC 70/51 SL	91	42,5	62,5	95	102	95	76	18
MC 90/44	84	38,5	58,5	115	95	115	69,5	20
MC 90/44 SL	84	42,5	62,5	115	95	115	69,5	20
MC 120/48	88	38,5	58,5	145	99	143	73	20
MC 120/48 SL	88	42,5	62,5	145	99	143	73	20
IL 52/57 M	91	34	54	78	111	80,5	85	15

Ø Size should be checked during installation.

COLOUR	COMPATIBILITY	CODE	EURO
GRIGIO FERRO	MA 260 SL, MA 260 SL PLUS, MA 260 B SL, MC 70/51, MC 70/51 SL	P16035910C	865,00
	MC 65/60, MC 65/60 P, MC 65/60 SL	P16032910C	865,00
	MA 263 SL, MA 263 SL PLUS, MA 263 B SL PLUS, MC 90/44, MC 90/44 SL	P16033910C	865,00
	MA 262 SL, MA 262 SL PLUS	P16034910C	865,00
	MA 261 SL, MA 261 SL PLUS	P16036910C	865,00
	MA 264 SL, MC 120/48, MC 120/48 SL	P16039910C	945,00
	IL 52/57 M	P160A3910C	770,00
MOKA	MA 260 SL, MA 260 SL PLUS, MA 260 B SL, MC 70/51, MC 70/51 SL	P16035890C	945,00
	MC 65/60, MC 65/60 P, MC 65/60 SL	P16032890C	945,00
	MA 263 SL, MA 263 SL PLUS, MA 263 B SL PLUS, MC 90/44, MC 90/44 SL	P16033890C	945,00
	MA 262 SL, MA 262 SL PLUS	P16034890C	945,00
	MA 261 SL, MA 261 SL PLUS	P16036890C	945,00
	MA 264 SL, MC 120/48, MC 120/48 SL	P16039890C	1.025,00
	IL 52/57 M	P160A3890C	865,00
NEVE	MA 260 SL, MA 260 SL PLUS, MA 260 B SL, MC 70/51, MC 70/51 SL	P16035650C	865,00
	MC 65/60, MC 65/60 P, MC 65/60 SL	P16032650C	865,00
	MA 263 SL, MA 263 SL PLUS, MA 263 B SL PLUS, MC 90/44, MC 90/44 SL	P16033650C	865,00
	MA 262 SL, MA 262 SL PLUS	P16034650C	865,00
	MA 261 SL, MA 261 SL PLUS	P16036650C	865,00
	MA 264 SL, MC 120/48, MC 120/48 SL	P16039650C	945,00
	IL 52/57 M	P160A3650C	770,00

If the Multifuoco System® is installed, you need to include vents in the false walling. The vents must be ordered separately.

ACCESSORIES ON REQUEST	
Accessories - Certified pipes and bends for connecting the flue	refer to the end of the section regarding the chosen interior

Prices are considered to be without sales taxes. Gruppo Piazzetta S.p.A. reserves the right to modify and/or delete all printed material, if deemed necessary by Gruppo Piazzetta without any written or prior notice.
Document reserved for the Gruppo Piazzetta S.p.A. sales organisation.

I VENEZIANI

EASY Cladding in hand-crafted Majolica.

WOOD

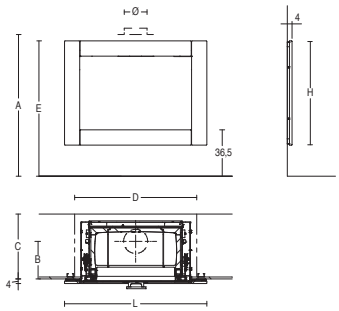

MOD.	A	B	C	D	E	L	H	Ø
MC 80/64 BL	100	29,5	50	93	115,5	107	91	18
MC 85/55 BL	91	29,5	50	98	106,5	112	82	18

MOD.	A	B	C	D	E	L	H	Ø
MC 105/48 BL	84	29,5	50	118	99,5	132	75	20

MOD.	A	B	C	D	E	L	H	Ø
MC 133/52 BL	88	29,5	50	146	103,5	160	79	20

Ø Size should be checked during installation.

COLOUR	COMPATIBILITY	CODE	EURO
GRIGIO FERRO	MC 80/64 BL	P160A5910C	1.080,00
	MC 85/55 BL	P160A6910C	1.080,00
	MC 105/48 BL	P160A7910C	1.080,00
	MC 133/52 BL	P160A8910C	1.220,00
MOKA	MC 80/64 BL	P160A5890C	1.105,00
	MC 85/55 BL	P160A6890C	1.105,00
	MC 105/48 BL	P160A7890C	1.105,00
	MC 133/52 BL	P160A8890C	1.250,00
NEVE	MC 80/64 BL	P160A5650C	1.080,00
	MC 85/55 BL	P160A6650C	1.080,00
	MC 105/48 BL	P160A7650C	1.080,00
	MC 133/52 BL	P160A8650C	1.220,00

If the Multifuoco System® is installed, you need to include vents in the false walling. The vents must be ordered separately.

ACCESSORIES ON REQUEST	
Accessories - Certified pipes and bends for connecting the flue	refer to the end of the section regarding the chosen interior

Prices are considered to be without sales taxes. Gruppo Piazzetta S.p.A. reserves the right to modify and/or delete all printed material, if deemed necessary by Gruppo Piazzetta without any written or prior notice.
Document reserved for the Gruppo Piazzetta S.p.A. sales organisation.

I VENEZIANI

EASY Cladding in hand-crafted Majolica.

PELLET THERMO

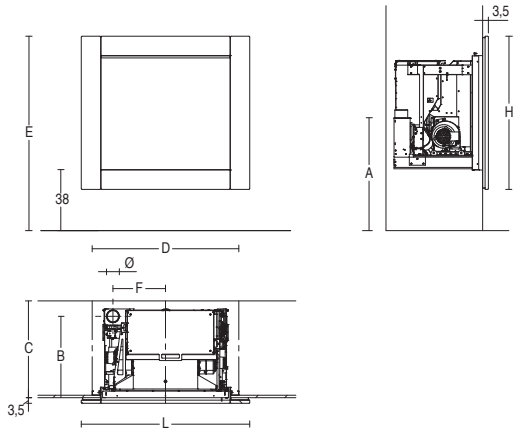

MOD.	A	B	C	D	E	F	L	H	Ø
IP 7	80,5	44	54	82	101,5	27,5	95	76	8
IP 7 M	80,5	44	54	82	101,5	27,5	95	76	8
MP 7	80,5	44	54	82	101,5	27,5	95	76	8
IP 7 *	80,5	44	54	82	106	27,5	104,5	80	8
IP 7 M *	80,5	44	54	82	106	27,5	104,5	80	8
MP 7 *	80,5	44	54	82	106	27,5	104,5	80	8
IP 9	82	50,5	60	91	110,5	32,5	104,5	85	8
IP 9 M	82	50,5	60	91	110,5	32,5	104,5	85	8

MOD.	A	B	C	D	E	F	L	H	Ø
MP 9	82	50,5	60	91	110,5	32,5	104,5	85	8
IP 9 *	82	50,5	60	91	116	32,5	104,5	90,5	8
IP 9 M *	82	50,5	60	91	116	32,5	104,5	90,5	8
MP 9 *	82	50,5	60	91	116	32,5	104,5	90,5	8
IP 11	101	50,5	60	91	120,5	32,5	104,5	95	8
IP 11 M	101	50,5	60	91	120,5	32,5	104,5	95	8
MP 11	101	50,5	60	91	120,5	32,5	104,5	95	8
IP 11 *	101	50,5	60	91	125,5	32,5	104,5	100	8

MOD.	A	B	C	D	E	F	L	H	Ø
IP 11 M *	101	50,5	60	91	125,5	32,5	104,5	100	8
MP 11 *	101	50,5	60	91	125,5	32,5	104,5	100	8
IP 14 TH	86	50	66	91	120,5	32,5	104,5	95	10
IP 14 TH *	86	50	66	91	125,5	32,5	104,5	100	10
MP 973 TH	33	55,5	73	105	110,5	38	90	85	10

Ø Size should be checked during installation.
* With tray kit.

COLOUR	COMPATIBILITY	CODE	EURO
GRIGIO FERRO	IP 7 [1], IP 7 M [1], MP 7 [1]	P16035910C	865,00
	IP 7 [2], IP 7 M [2], MP 7 [1]	P16036910C	865,00
	IP 9, IP 9 M, MP 9	P16010910C	865,00
	IP 9 [3], IP 9 M [3], MP 9 [3]	P160A2910C	865,00
	IP 11, IP 11M, MP 11, IP 14 TH	P160A0910C	865,00
	IP 11 [4], IP 11 M [4], MP 11 [4], IP 14 TH WITH LOADING TRAY	P160A1910C	865,00
	MP 973 TH	P16032910C	865,00
MOKA	IP 7 [1], IP 7 M [1], MP 7 [1]	P16035890C	945,00
	IP 7 [2], IP 7 M [2], MP 7 [1]	P16036890C	945,00
	IP 9, IP 9 M, MP 9	P16010890C	945,00
	IP 9 [3], IP 9 M [3], MP 9 [3]	P160A2890C	945,00
	IP 11, IP 11M, MP 11, IP 14 TH	P160A0890C	945,00
	IP 11 [4], IP 11 M [4], MP 11 [4], IP 14 TH WITH LOADING TRAY	P160A1890C	945,00
	MP 973 TH	P16032890C	945,00
NEVE	IP 7 [1], IP 7 M [1], MP 7 [1]	P16035650C	865,00
	IP 7 [2], IP 7 M [2], MP 7 [1]	P16036650C	865,00
	IP 9, IP 9 M, MP 9	P16010650C	865,00
	IP 9 [3], IP 9 M [3], MP 9 [3]	P160A2650C	865,00
	IP 11, IP 11M, MP 11, IP 14 TH	P160A0650C	865,00
	IP 11 [4], IP 11 M [4], MP 11 [4], IP 14 TH WITH LOADING TRAY	P160A1650C	865,00
	MP 973 TH	P16032650C	865,00

[1] For installation with IP IP 7 - IP 7 M - MP, the compensation kit is essential. Incompatible with front pellet-loading tray.
[2] Für die Montage von IP 7 - IP 7 M wird ein Kit Ausgleichsprofile benötigt. Kompatibel mit Pellet-Befüllschublade.
[3] The H=64 pellet tray kit is required for installation with IP 9 - IP 9 M - MP 9.
[4] The H=64 pellet tray kit is required for installation with IP 11 - IP 11 M - MP 11.

OBLIGATORY ACCESSORIES	CODE	EURO
Compensation kit for IP 7, NOT compatible with front pellet-loading tray	N08010021C	100,00
Compensation kit for IP 7 M - MP 7, NOT compatible with front pellet-loading tray	N08010033C	100,00
Compensation kit for IP 7, compatible with front pellet-loading tray	N08010022C	125,00
Compensation kit for IP 7 M - MP 7, compatible with front pellet-loading tray	N08010034C	125,00

ACCESSORIES ON REQUEST	
Accessories - Certified pipes and bends for connecting the flue	refer to the end of the section regarding the chosen interior

Prices are considered to be without sales taxes. Gruppo Piazzetta S.p.A. reserves the right to modify and/or delete all printed material, if deemed necessary by Gruppo Piazzetta without any written or prior notice.
Document reserved for the Gruppo Piazzetta S.p.A. sales organisation.

I VENEZIANI

EDINBURGH

Cladding in hand-crafted Majolica, made in one piece, rear supports and hood support in black-painted steel.
Raised element in marble that can be painted in a colour of your choice.

WOOD

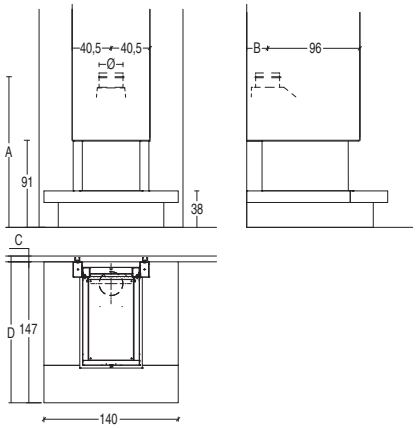

MOD.	A	B	C	D	Ø
MA 272 SL	167	22	-	-	25

MOD.	A	B	C	D	Ø
MA 272 SL PLUS	204	28	6	153	25

Ø Size should be checked during installation.

COLOUR	COMPATIBILITY	CODE	EURO
ARDESIA	MA 272 SL, MA 272 SL PLUS	P18050240C	3.280,00
BIANCO ANTICO		P18050640C	3.280,00
BIANCO GRIGIO		P18050410C	3.280,00
KAKI		P18050990C	3.280,00
MATTONE		P180504A0C	3.280,00
SAHARA		P18050220C	3.280,00
SENAPE		P180505A0C	3.280,00
TERRA COTTA		P18050090C	3.280,00
TORTORA		P180506A0C	3.280,00

ACCESSORIES ON REQUEST	
Accessories - Certified pipes and bends for connecting the flue	refer to the end of the section regarding the chosen interior

Prices are considered to be without sales taxes. Gruppo Piazzetta S.p.A. reserves the right to modify and/or delete all printed material, if deemed necessary by Gruppo Piazzetta without any written or prior notice.
Document reserved for the Gruppo Piazzetta S.p.A. sales organisation.

I VENEZIANI

EOS

Hand-crafted clay cladding, blasted Steel profiles. The decorations, also in clay, are the result of expert craftsmanship. Every frame is a unique and unrepeatable item.

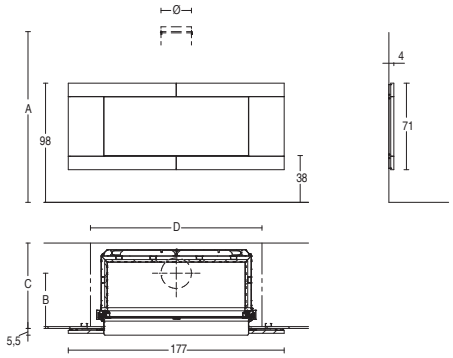

MOD.	A	B	C	D	Ø
MA 264 SL	158,5	39,5	59	140	25

MOD.	A	B	C	D	Ø
MC 120/48	88	38	58	145	20

Ø Size should be checked during installation.

COLOUR	COMPATIBILITY	CODE	EURO
LE TERRE	MA 264 SL [1], MC 120/48 [1]	P17053000C	6.690,00

If the Multifuoco System® is installed, you need to include vents in the false walling. The vents must be ordered separately.
[1] The compensation kit is required for installation with MA SL - MC.

OBLIGATORY ACCESSORIES	CODE	EURO
Compensation kit for MA264SL-MC120/48	P08013100C	430,00

ACCESSORIES ON REQUEST	
Accessories - Certified pipes and bends for connecting the flue	refer to the end of the section regarding the chosen interior

Prices are considered to be without sales taxes. Gruppo Piazzetta S.p.A. reserves the right to modify and/or delete all printed material, if deemed necessary by Gruppo Piazzetta without any written or prior notice.
Document reserved for the Gruppo Piazzetta S.p.A. sales organisation.

I VENEZIANI

ESSEN

Hand-crafted Majolica cladding with structure in black-painted Steel.

WOOD

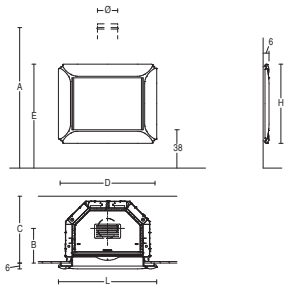

MOD.	A	B	C	D	E	L	H	Ø
MA 260 SL	157	42	64,5	90	103	97,5	78,5	20
MA 260 SL PLUS	197	42	74,5	100	103	97,5	78,5	20
MA 260 B SL	157	33,3	66,6	91,5	103	97,5	78,5	20
MA 263 SL	154	40	59,5	112	96,5	118	72	25
MA 263 SL PLUS	194	40	69,5	122	96,5	118	72	25
MA 263 B SL PLUS	156	31	61,6	112	96,5	118	72	20

MOD.	A	B	C	D	E	L	H	Ø
MA 264 SL	158,5	40	59,5	140	100,5	146	76	25
MC 65/60	100	38,5	58,5	92	112,5	93	88	18
MC 65/60 P	146	38,5	58,5	92	112,5	93	88	18
MC 65/60 SL	100	42,5	62,5	92	112,5	93	88	18
MC 70/51	91	38,5	58,5	97	103	97,5	78,5	18

MOD.	A	B	C	D	E	L	H	Ø
MC 70/51 SL	91	42,5	62,5	97	103	97,5	78,5	18
MC 90/44	84	38,5	58,5	117	96,5	118	72	20
MC 90/44 SL	84	42,5	62,5	117	96,5	118	72	20
MC 120/48	88	38,5	58,5	145	100,5	146	76	20
MC 120/48 SL	88	42,5	62,5	145	100,5	146	76	20

Ø Size should be checked during installation.

COLOUR	COMPATIBILITY	CODE	EURO
BIANCO GRIGIO	MA 260 SL, MA 260 SL PLUS, MA 260 B SL, MC 70/51, MC 70/51 SL	P16020410C	1.010,00
	MC 65/60, MC 65/60 P, MC 65/60 SL	P16019410C	1.010,00
	MA 263 SL, MA 263 SL PLUS, MA 263 B SL PLUS, MC 90/44, MC 90/44 SL	P16018410C	1.010,00
	MA 264 SL, MC 120/48, MC 120/48 SL	P16017410C	1.155,00
BLU VERDEMARE	MA 260 SL, MA 260 SL PLUS, MA 260 B SL, MC 70/51, MC 70/51 SL	P16020110C	1.010,00
	MC 65/60, MC 65/60 P, MC 65/60 SL	P16019110C	1.010,00
	MA 263 SL, MA 263 SL PLUS, MA 263 B SL PLUS, MC 90/44, MC 90/44 SL	P16018110C	1.010,00
	MA 264 SL, MC 120/48, MC 120/48 SL	P16017110C	1.155,00
GIALLO ACCESO	MA 260 SL, MA 260 SL PLUS, MA 260 B SL, MC 70/51, MC 70/51 SL	P16020260C	1.010,00
	MC 65/60, MC 65/60 P, MC 65/60 SL	P16019260C	1.010,00
	MA 263 SL, MA 263 SL PLUS, MA 263 B SL PLUS, MC 90/44, MC 90/44 SL	P16018260C	1.010,00
	MA 264 SL, MC 120/48, MC 120/48 SL	P16017260C	1.155,00
ROSSO LAVA	MA 260 SL, MA 260 SL PLUS, MA 260 B SL, MC 70/51, MC 70/51 SL	P16020450C	1.010,00
	MC 65/60, MC 65/60 P, MC 65/60 SL	P16019450C	1.010,00
	MA 263 SL, MA 263 SL PLUS, MA 263 B SL PLUS, MC 90/44, MC 90/44 SL	P16018450C	1.010,00
	MA 264 SL, MC 120/48, MC 120/48 SL	P16017450C	1.155,00

If the Multifuoco System® is installed, you need to include vents in the false walling. The vents must be ordered separately.

ACCESSORIES ON REQUEST	
Accessories - Certified pipes and bends for connecting the flue	refer to the end of the section regarding the chosen interior

Prices are considered to be without sales taxes. Gruppo Piazzetta S.p.A. reserves the right to modify and/or delete all printed material, if deemed necessary by Gruppo Piazzetta without any written or prior notice.
Document reserved for the Gruppo Piazzetta S.p.A. sales organisation.

I VENEZIANI

ESSEN

Hand-crafted Majolica cladding with structure in black-painted Steel.

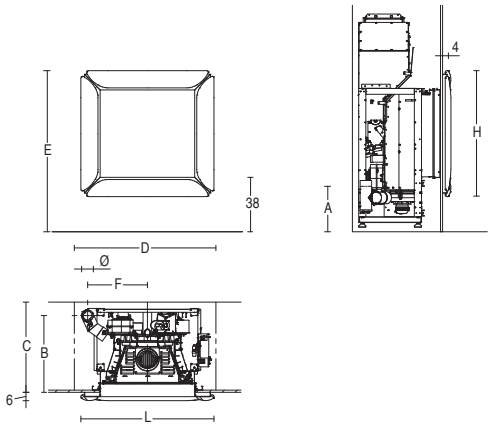

MOD.	A	B	C	D	E	F	L	H	Ø
IP 7	80,5	54	44	82	103	27,5	97,5	78,5	8
IP 7 M	80,5	54	44	82	103	27,5	97,5	78,5	8

MOD.	A	B	C	D	E	F	L	H	Ø
MP 7	80,5	54	44	82	103	27,5	97,5	78,5	8

MOD.	A	B	C	D	E	F	L	H	Ø
MP 973 TH	33	55	72	105	112,5	38	93	88	10

Ø Size should be checked during installation.

COLOUR	COMPATIBILITY	CODE	EURO
BIANCO GRIGIO	IP 7 [1], IP 7 M [1], MP 7 [1]	P16020410C	1.010,00
	MP 973 TH, MP 973 TH ACS	P16019410C	1.010,00
BLU VERDEMARE	IP 7 [1], IP 7 M [1], MP 7 [1]	P16020110C	1.010,00
	MP 973 TH, MP 973 TH ACS	P16019110C	1.010,00
GIALLO ACCESO	IP 7 [1], IP 7 M [1], MP 7 [1]	P16020260C	1.010,00
	MP 973 TH, MP 973 TH ACS	P16019260C	1.010,00
ROSSO LAVA	IP 7 [1], IP 7 M [1], MP 7 [1]	P16020450C	1.010,00
	MP 973 TH, MP 973 TH ACS	P16019450C	1.010,00

If the Multifuoco System® is installed, you need to include vents in the false walling. The vents must be ordered separately.
[1] For installation with IP 7 - IP 7 M - MP 7, the compensation kit is essential.

OBLIGATORY ACCESSORIES	CODE	EURO
Compensation kit for IP 7, NOT compatible with front pellet-loading tray	N08010021C	100,00
Compensation kit for IP 7 M - MP 7, NOT compatible with front pellet-loading tray	N08010033C	100,00

ACCESSORIES ON REQUEST	
Accessories - Certified pipes and bends for connecting the flue	refer to the end of the section regarding the chosen interior

Prices are considered to be without sales taxes. Gruppo Piazzetta S.p.A. reserves the right to modify and/or delete all printed material, if deemed necessary by Gruppo Piazzetta without any written or prior notice.
Document reserved for the Gruppo Piazzetta S.p.A. sales organisation.

I VENEZIANI

FORUM

Hand-crafted cladding in Majolica, blasted Steel profiles. In the photo: Prugna Pennellato with decorations in crystalline glaze.

WOOD

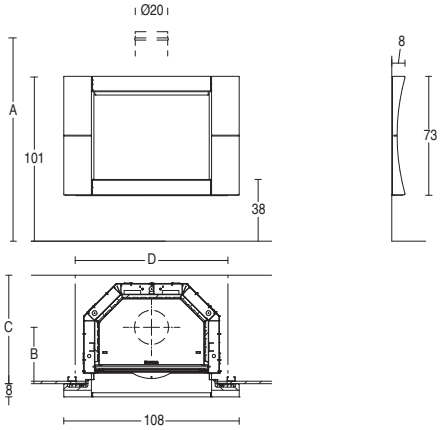

MOD.	A	B	C	D	Ø
MA 260 SL	158,5	42,5	64,5	90	20
MA 260 SL PLUS	198,5	42,5	74,5	100	20
MA 260 B SL	158,5	33,3	66,6	91,5	20

MOD.	A	B	C	D	Ø
MC 70/51	91	38,5	58,5	97	18
MC 70/51 SL	91	42,5	63,5	97	18

Ø Size should be checked during installation.

BASIC LINE

COLOUR	COMPATIBILITY	CODE	EURO
ARDESIA	MA 260 SL, MA 260 SL PLUS, MA 260 B SL, MC 70/51, MC 70/51 SL	P16066240C	2.015,00
BIANCO GRIGIO		P16066410C	2.015,00
BIANCO ANTICO		P16066640C	2.015,00
BIANCO		P16066300C	2.015,00
MATTONE		P160664A0C	2.015,00
KAKI		P16066990C	2.015,00
SAHARA		P16066220C	2.015,00
SENAPE		P160665A0C	2.015,00
TERRA COTTA		P16066090C	2.015,00
TORTORA		P160666A0C	2.015,00

ELEGANCE LINE

COLOUR	COMPATIBILITY	EURO
PENNELLATO	MA 260 SL, MA 260 SL PLUS, MA 260 B SL, MC 70/51, MC 70/51 SL	8.045,00
PENNELLATO DECORATO		3.035,00
PENNELLATO DAMASCATO		3.860,00

LINEA LUXURY

COLOUR	COMPATIBILITY	EURO
ORO	MA 260 SL, MA 260 SL PLUS, MA 260 B SL, MC 70/51, MC 70/51 SL	4.680,00
PLATINO		4.615,00
RAME		4.615,00
ORO DECORATO		3.860,00
PLATINO DECORATO		5.435,00
RAME DECORATO		5.435,00
ORO DAMASCATO		4.680,00
PLATINO DAMASCATO		6.245,00
RAME DAMASCATO		6.245,00

If the Multifuoco System® is installed, you need to include vents in the false walling. The vents must be ordered separately.

ACCESSORIES ON REQUEST

Accessories - Certified pipes and bends for connecting the flue	refer to the end of the section regarding the chosen interior

Prices are considered to be without sales taxes. Gruppo Piazzetta S.p.A. reserves the right to modify and/or delete all printed material, if deemed necessary by Gruppo Piazzetta without any written or prior notice.
Document reserved for the Gruppo Piazzetta S.p.A. sales organisation.

I VENEZIANI

FOX

Cladding made with large hand-crafted Majolica panels. In the photo: Platino damascato. Base, front piece and profiles in blasted steel.

WOOD

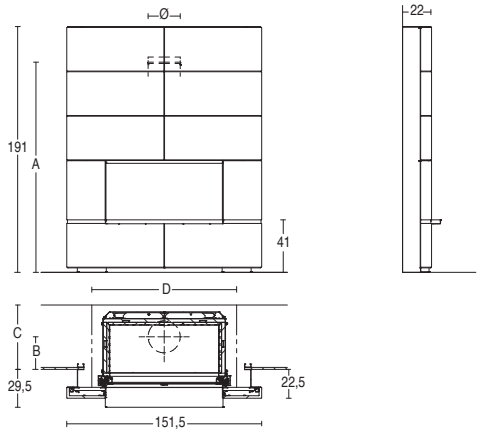

MOD.	A	B	C	D	Ø
MA 263 SL	158,5	19,5	39	112	25
MA 263 SL PLUS	198,5	19,5	49	122	25
MA 263 B SL PLUS	198	10	39	122	20

MOD.	A	B	C	D	Ø
MC 90/44	87	18	39	115	20

MOD.	A	B	C	D	Ø
MC 90/44 SL	87	22	42	115	20

Ø Size should be checked during installation.

BASIC LINE

COLOUR	COMPATIBILITY	CODE	EURO
ARDESIA	MA 263 SL, MA 263 SL PLUS, MA 263 B SL PLUS, MC 90/44, MC 90/44 SL	P16087240C	2.440,00
BIANCO GRIGIO		P16087410C	2.440,00
BIANCO ANTICO		P16087640C	2.440,00
BIANCO		P16087300C	2.440,00
MATTONE		P160874A0C	2.440,00
KAKI		P16087990C	2.440,00
SAHARA		P16087220C	2.440,00
SENAPE		P160875A0C	2.440,00
TERRA COTTA		P16087090C	2.440,00
TORTORA		P160876A0C	2.440,00

ELEGANCE LINE

COLOUR	COMPATIBILITY	EURO
PENNELLATO	MA 263 SL, MA 263 SL PLUS, MA 263 B SL PLUS, MC 90/44, MC 90/44 SL	6.565,00
PENNELLATO DECORATO		3.655,00
PENNELLATO DAMASCATO		5.705,00

LINEA LUXURY

COLOUR	COMPATIBILITY	EURO
ORO	MA 263 SL, MA 263 SL PLUS, MA 263 B SL PLUS, MC 90/44, MC 90/44 SL	6.110,00
PLATINO		7.480,00
RAME		7.480,00
ORO DECORATO		5.635,00
PLATINO DECORATO		9.520,00
RAME DECORATO		9.520,00
ORO DAMASCATO		7.685,00
PLATINO DAMASCATO		9.935,00
RAME DAMASCATO		9.935,00

If the Multifuoco System® is installed, you need to include vents in the false walling. The vents must be ordered separately.

OBLIGATORY ACCESSORIES	CODE	EURO
FOX steel parts kit	P08013260C	4.810,00

ACCESSORIES ON REQUEST

Accessories - Certified pipes and bends for connecting the flue	refer to the end of the section regarding the chosen interior

Prices are considered to be without sales taxes. Gruppo Piazzetta S.p.A. reserves the right to modify and/or delete all printed material, if deemed necessary by Gruppo Piazzetta without any written or prior notice.
Document reserved for the Gruppo Piazzetta S.p.A. sales organisation.

I VENEZIANI

FOX 1

Cladding made with large hand-crafted Majolica panels. In the photo, Moka Pennellato with decorations in matching crystalline glaze. Base, front piece and profiles in steel.

WOOD

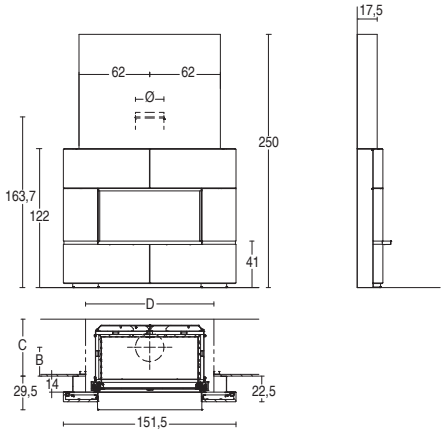

MOD.	A	B	C	D	Ø
MA 263 SL	158,5	19,5	39	112	25
MA 263 SL PLUS	198,5	19,5	49	122	25
MA 263 B SL PLUS	198	10	39	122	20

MOD.	A	B	C	D	Ø
MC 90/44	87	18	39	115	20

MOD.	A	B	C	D	Ø
MC 90/44 SL	87	22	42	115	20

Ø Size should be checked during installation.

BASIC LINE

COLOUR	COMPATIBILITY	CODE	EURO
ARDESIA	MA 263 SL, MA 263 SL PLUS, MA 263 B SL PLUS, MC 90/44, MC 90/44 SL	P16082240C	1.595,00
BIANCO GRIGIO		P16082410C	1.595,00
BIANCO ANTICO		P16082640C	1.595,00
BIANCO		P16082300C	1.595,00
MATTONE		P160824A0C	1.595,00
KAKI		P16082990C	1.595,00
SAHARA		P16082220C	1.595,00
SENAPE		P160825A0C	1.595,00
TERRA COTTA		P16082090C	1.595,00
TORTORA		P160826A0C	1.595,00

ELEGANCE LINE

COLOUR	COMPATIBILITY	EURO
PENNELLATO	MA 263 SL, MA 263 SL PLUS, MA 263 B SL PLUS, MC 90/44, MC 90/44 SL	2.400,00
PENNELLATO DECORATO		3.225,00
PENNELLATO DAMASCATO		3.625,00

LINEA LUXURY

COLOUR	COMPATIBILITY	EURO
ORO	MA 263 SL, MA 263 SL PLUS, MA 263 B SL PLUS, MC 90/44, MC 90/44 SL	4.425,00
PLATINO		4.425,00
RAME		3.455,00
ORO DECORATO		5.255,00
PLATINO DECORATO		5.255,00
RAME DECORATO		4.275,00
ORO DAMASCATO		5.670,00
PLATINO DAMASCATO		5.670,00
RAME DAMASCATO		4.680,00

If the Multifuoco System® is installed, you need to include vents in the false walling. The vents must be ordered separately.

OBLIGATORY ACCESSORIES	CODE	EURO
FOX 1 steel parts kit	P08013230C	4.650,00

ACCESSORIES ON REQUEST	
Accessories - Certified pipes and bends for connecting the flue	refer to the end of the section regarding the chosen interior

Prices are considered to be without sales taxes. Gruppo Piazzetta S.p.A. reserves the right to modify and/or delete all printed material, if deemed necessary by Gruppo Piazzetta without any written or prior notice.
Document reserved for the Gruppo Piazzetta S.p.A. sales organisation.

I VENEZIANI

FREE

Cladding in hand-crafted Majolica, blasted Steel profiles. In the photo: Grigio Metal with crystalline glaze parts, raised element in blasted steel available. The steel hood is required for the installation.

WOOD

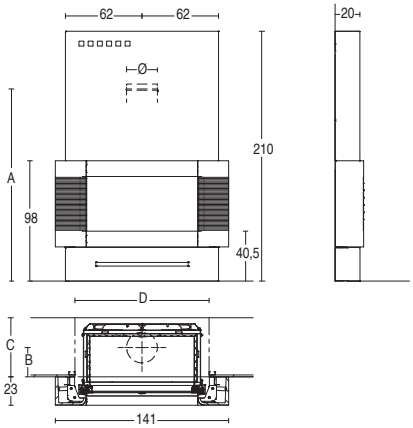

MOD.	A	B	C	D	Ø
MA 263 SL	158	17,5	37,5	112	25
MA 263 SL PLUS	198	17,5	47,5	122	25

MOD.	A	B	C	D	Ø
MA 263 B SL PLUS	197,5	8,5	37,5	122	20
MC 90/44	86,5	16,5	37,5	115	20

Ø Size should be checked during installation.

BASIC LINE

COLOUR	COMPATIBILITY	CODE	EURO
ARDESIA	MA 263 SL, MA 263 SL PLUS, MA 263 B SL PLUS, MC 90/44	P16090240C	2.910,00
BIANCO GRIGIO		P16090410C	2.910,00
BIANCO ANTICO		P16090640C	2.910,00
BIANCO		P16090300C	2.910,00
MATTONE		P160904A0C	2.910,00
KAKI		P16090990C	2.910,00
SAHARA		P16090220C	2.910,00
SENAPE		P160905A0C	2.910,00
TERRA COTTA		P16090090C	2.910,00
TORTORA		P160906A0C	2.910,00

ELEGANCE LINE

COLOUR	COMPATIBILITY	EURO
PENNELLATO	MA 263 SL, MA 263 SL PLUS, MA 263 B SL PLUS, MC 90/44	4.385,00
PENNELLATO DECORATO		5.195,00
PENNELLATO DAMASCATO		6.015,00

LINEA LUXURY

COLOUR	COMPATIBILITY	EURO
ORO	MA 263 SL, MA 263 SL PLUS, MA 263 B SL PLUS, MC 90/44	6.400,00
PLATINO		6.400,00
RAME		5.435,00
ORO DECORATO		7.225,00
PLATINO DECORATO		7.225,00
RAME DECORATO		6.245,00
ORO DAMASCATO		8.045,00
PLATINO DAMASCATO		8.045,00
RAME DAMASCATO		7.070,00

The raised element includes slits that allow the hot air from the Multifuoco System® to come through. The vents are included in the cladding.

OBLIGATORY ACCESSORIES	CODE	EURO
FREE steel hood [1]	P08012960C	1.490,00

[1] The hood is required for installation with all compatible fireboxes.

ACCESSORIES ON REQUEST	
Accessories - Certified pipes and bends for connecting the flue	refer to the end of the section regarding the chosen interior

Prices are considered to be without sales taxes. Gruppo Piazzetta S.p.A. reserves the right to modify and/or delete all printed material, if deemed necessary by Gruppo Piazzetta without any written or prior notice.
Document reserved for the Gruppo Piazzetta S.p.A. sales organisation.

I VENEZIANI

FRIBURGO

Hand-crafted Majolica cladding with bas-relief decorations. Profile in black-painted Steel.

WOOD

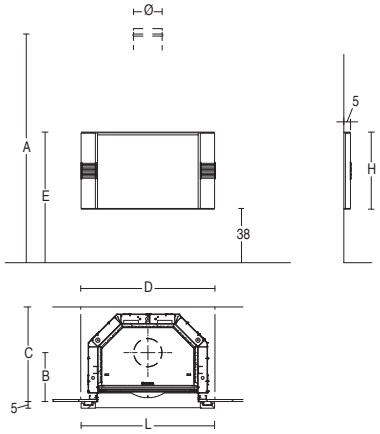

MOD.	A	B	C	D	E	L	H	Ø
MA 260 SL	156,5	42	64	90	91,5	93,5	54	20
MA 260 SL PLUS	196,5	42	74	100	91,5	93,5	54	20
MA 260 B SL	157	32,8	65,6	91,5	91,5	93,5	54	20
MA 263 SL	154	39,5	59	112	85	114	47,5	25

MOD.	A	B	C	D	E	L	H	Ø
MA 263 SL PLUS	194	39,5	69	122	85	114	47,5	25
MA 263 B SL PLUS	196	30	60,6	122	85	114	47,5	20
MA 264 SL	158,5	39,5	59	140	89	142	51,5	25
MC 70/51	91	38	58	97	91,5	93,5	54	18

MOD.	A	B	C	D	E	L	H	Ø
MC 70/51 SL	91	42	62	97	91,5	93,5	54	18
MC 90/44	84	38	58	117	85	114	47,5	20
MC 90/44 SL	84	42	62	117	85	114	47,5	20
MC 120/48	88	38	58	145	89	142	51,5	20
MC 120/48 SL	88	42	62	145	89	142	51,5	20

Ø Size should be checked during installation.

COLOUR	COMPATIBILITY	CODE	EURO
BIANCO ANTICO	MA 260 SL, MA 260 SL PLUS, MA 260 B SL, MC 70/51, MC 70/51 SL	P16004640C	945,00
	MA 263 SL, MA 263 SL PLUS, MA 263 B SL PLUS, MC 90/44, MC 90/44 SL	P16005640C	945,00
	MA 264 SL, MC 120/48, MC 120/48 SL	P16006640C	1.045,00
GIALLO ACCESO	MA 260 SL, MA 260 SL PLUS, MA 260 B SL, MC 70/51, MC 70/51 SL	P16004260C	945,00
	MA 263 SL, MA 263 SL PLUS, MA 263 B SL PLUS, MC 90/44, MC 90/44 SL	P16005260C	945,00
	MA 264 SL, MC 120/48, MC 120/48 SL	P16006260C	1.045,00
GRIGIO CERATO	MA 260 SL, MA 260 SL PLUS, MA 260 B SL, MC 70/51, MC 70/51 SL	P16004310C	945,00
	MA 263 SL, MA 263 SL PLUS, MA 263 B SL PLUS, MC 90/44, MC 90/44 SL	P16005310C	945,00
	MA 264 SL, MC 120/48, MC 120/48 SL	P16006310C	1.045,00
ROSSO LAVA	MA 260 SL, MA 260 SL PLUS, MA 260 B SL, MC 70/51, MC 70/51 SL	P16004450C	945,00
	MA 263 SL, MA 263 SL PLUS, MA 263 B SL PLUS, MC 90/44, MC 90/44 SL	P16005450C	945,00
	MA 264 SL, MC 120/48, MC 120/48 SL	P16006450C	1.045,00

If the Multifuoco System® is installed, you need to include vents in the false walling. The vents must be ordered separately.

ACCESSORIES ON REQUEST	
Accessories - Certified pipes and bends for connecting the flue	refer to the end of the section regarding the chosen interior

Prices are considered to be without sales taxes. Gruppo Piazzetta S.p.A. reserves the right to modify and/or delete all printed material, if deemed necessary by Gruppo Piazzetta without any written or prior notice.
Document reserved for the Gruppo Piazzetta S.p.A. sales organisation.

I VENEZIANI

GALLERY

Cladding in hand-crafted Majolica, blasted Steel profiles. In the photo: Grigio Rosso enriched with shades and details in matching crystalline glaze.

WOOD PELLET

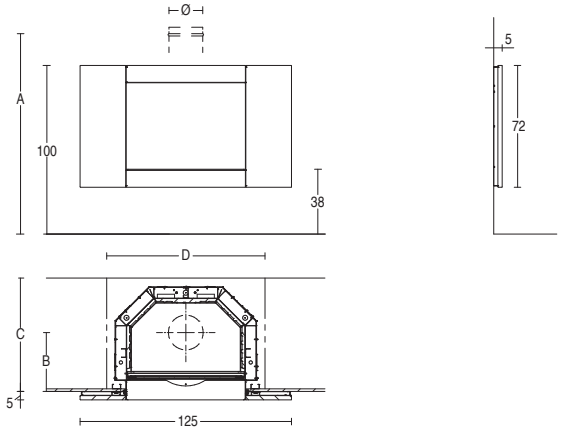

MOD.	A	B	C	D	Ø
MA 260 SL	157	42,5	64,5	90	20
MA 260 SL PLUS	197	42,5	74,5	100	20
MA 260 B SL	157	42,5	85	90	20

MOD.	A	B	C	D	Ø
MC 70/51	91	38,5	58,5	95	18
MC 70/51 SL	91	42,5	62,5	95	18
IP 7	80,5	44	54	78	8

MOD.	A	B	C	D	Ø
IP 7 M	80,5	44	54	78	8
MP 7	80,5	44	54	78	8

Ø Size should be checked during installation.

BASIC LINE

COLOUR	COMPATIBILITY	CODE	EURO
ARDESIA	MA 260 SL [2], MA 260 SL PLUS [2], MA 260 B SL [2] MC 70/51 [2], MC 70/51 SL[2], MP 7 [1], IP 7 [1], IP 7 M [1]	P16097240C	1.705,00
BIANCO GRIGIO		P16097410C	1.705,00
BIANCO ANTICO		P16097640C	1.705,00
BIANCO		P16097300C	1.705,00
MATTONE		P160974A0C	1.705,00
KAKI		P16097990C	1.705,00
SAHARA		P16097220C	1.705,00
SENAPE		P160975A0C	1.705,00
TERRA COTTA		P16097090C	1.705,00
TORTORA		P160976A0C	1.705,00

ELEGANCE LINE

COLOUR	COMPATIBILITY	EURO
PENNELLATO	MA 260 SL [2], MA 260 SL PLUS [2], MA 260 B SL [2] MC 70/51 [2], MC 70/51 SL[2], MP 7 [1], IP 7 [1], IP 7 M [1]	2.570,00
PENNELLATO DECORATO		3.395,00
PENNELLATO DAMASCATO		4.220,00

LINEA LUXURY

COLOUR	COMPATIBILITY	EURO
ORO	MA 260 SL [2], MA 260 SL PLUS [2], MA 260 B SL [2] MC 70/51 [2], MC 70/51 SL[2], MP 7 [1], IP 7 [1], IP 7 M [1]	4.150,00
PLATINO		4.150,00
RAME		3.395,00
ORO DECORATO		4.960,00
PLATINO DECORATO		4.960,00
RAME DECORATO		4.220,00
ORO DAMASCATO		5.780,00
PLATINO DAMASCATO		5.780,00
RAME DAMASCATO		5.035,00

If the Multifuoco System® is installed, you need to include vents in the false walling. The vents must be ordered separately.
[1] For installation with IP IP 7 - IP 7 M - MP, the compensation kit is essential. Incompatible with front pellet-loading tray.
[2] The compensation kit is required for installation with MA SL - MA SL PLUS - MC - MC SL.

OBLIGATORY ACCESSORIES	CODE	EURO
Compensation kit for MA260SL-MA260SLPLUS-MA260BSL-MC70/51-MC70/51SL	P08013730C	430,00
Compensation kit for IP 7, NOT compatible with front pellet-loading tray	N08010021C	100,00
Compensation kit for IP 7 M - MP 7, NOT compatible with front pellet-loading tray	N08010033C	100,00

ACCESSORIES ON REQUEST	
Accessories - Certified pipes and bends for connecting the flue	refer to the end of the section regarding the chosen interior

Prices are considered to be without sales taxes. Gruppo Piazzetta S.p.A. reserves the right to modify and/or delete all printed material, if deemed necessary by Gruppo Piazzetta without any written or prior notice.
Document reserved for the Gruppo Piazzetta S.p.A. sales organisation.

I VENEZIANI

GRAZ

Cladding in hand-crafted Majolica, with sliding panels which close the two storage trays. Structure in black-painted Steel. Not reversible.

WOOD

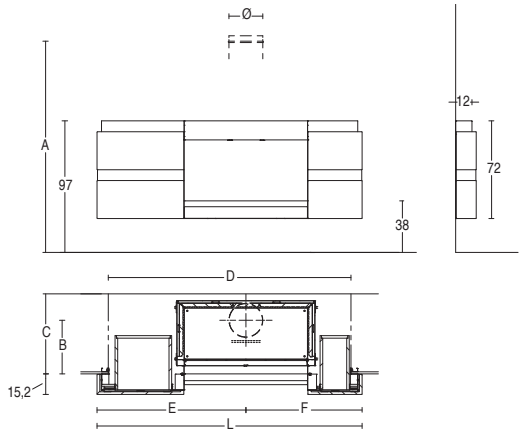

MOD.	A	B	C	D	E	F	L	Ø
MA 263 SL	154	39,5	59	179	109,5	86	195,5	25
MA 263 SL PLUS	194	39,5	69	189	109,5	86	195,5	25
MA 263 B SL PLUS	194	30	60	189	109,5	86	195,5	20

MOD.	A	B	C	D	E	L	H	Ø
MC 90/44	84	32	52	179	109,5	86	195,5	20
MC 90/44 SL	84	36	56	179	109,5	86	195,5	20
MA 264 SL	158	39,5	59	207	123,5	100	223,5	25
MC 120/48	88	32	52	207	123,5	100	223,5	20

MOD.	A	B	C	D	E	L	H	Ø
MC 120/48 SL	88	36	56	207	123,5	100	223,5	20

Ø Size should be checked during installation.

COLOUR	COMPATIBILITY	CODE	EURO
BIANCO ANTICO	MA 263 SL [1], MA 263 SL PLUS [1], MA 263 B SL PLUS [1], MC 90/44 [1], MC 90/44 SL [1]	P18010640C	2.445,00
	MA 264 SL [1], MC 120/48 [1], MC 120/48 SL [1]	P18011640C	2.690,00
GIALLO ACCESO	MA 263 SL [1], MA 263 SL PLUS [1], MA 263 B SL PLUS [1], MC 90/44 [1], MC 90/44 SL [1]	P18010260C	2.445,00
	MA 264 SL [1], MC 120/48 [1], MC 120/48 SL [1]	P18011260C	2.690,00
GRIGIO CERATO	MA 263 SL [1], MA 263 SL PLUS [1], MA 263 B SL PLUS [1], MC 90/44 [1], MC 90/44 SL [1]	P18010310C	2.445,00
	MA 264 SL [1], MC 120/48 [1], MC 120/48 SL [1]	P18011310C	2.690,00
ROSSO LAVA	MA 263 SL [1], MA 263 SL PLUS [1], MA 263 B SL PLUS [1], MC 90/44 [1], MC 90/44 SL [1]	P18010450C	2.445,00
	MA 264 SL [1], MC 120/48 [1], MC 120/48 SL [1]	P18011450C	2.690,00

If the Multifuoco System® is installed, you need to include vents in the false walling. The vents must be ordered separately.
[1] The compensation kit is required for versions with MA SL - MC - MC SL.

OBLIGATORY ACCESSORIES	CODE	EURO
Compensation kit for MA263SL-MC90/44-MC90/44P-MC90/44SL	P08015000C	270,00
Compensation kit for MA264SL-MC120/48-MC120/48SL	P08015010C	270,00

ACCESSORIES ON REQUEST	
Accessories - Certified pipes and bends for connecting the flue	refer to the end of the section regarding the chosen interior

Prices are considered to be without sales taxes. Gruppo Piazzetta S.p.A. reserves the right to modify and/or delete all printed material, if deemed necessary by Gruppo Piazzetta without any written or prior notice.
Document reserved for the Gruppo Piazzetta S.p.A. sales organisation.

I VENEZIANI

KENSINGTON

Cladding with base in hand-crafted Majolica, in a single unit. Raised element in marble that can be painted in a colour of your choice. Profiles and hood support in black-painted Steel.

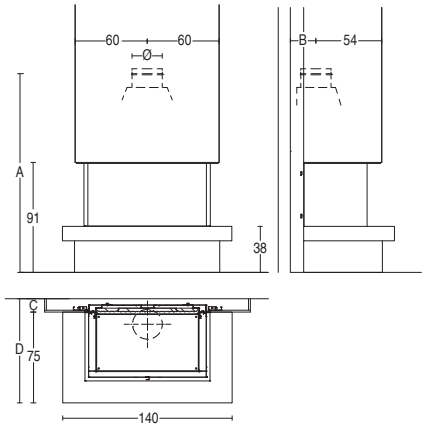

MOD.	A	B	C	D	Ø
MA 271 SL	167	21	11	86	25

MOD.	A	B	C	D	Ø
MA 271 SL PLUS	204	27	17	92	25

Ø Size should be checked during installation.

COLOUR	COMPATIBILITY	CODE	EURO
ARDESIA	MA 271 SL, MA 271 SL PLUS	P18054240C	2.585,00
BIANCO ANTICO		P18054640C	2.585,00
BIANCO GRIGIO		P18054410C	2.585,00
KAKI		P18054990C	2.585,00
MATTONE		P180544A0C	2.585,00
SAHARA		P18054220C	2.585,00
SENAPE		P180545A0C	2.585,00
TERRA COTTA		P18054090C	2.585,00
TORTORA		P180546A0C	2.585,00

ACCESSORIES ON REQUEST	
Accessories - Certified pipes and bends for connecting the flue	refer to the end of the section regarding the chosen interior

Prices are considered to be without sales taxes. Gruppo Piazzetta S.p.A. reserves the right to modify and/or delete all printed material, if deemed necessary by Gruppo Piazzetta without any written or prior notice.
Document reserved for the Gruppo Piazzetta S.p.A. sales organisation.

I VENEZIANI

KOSMOS

Hand-crafted clay cladding, blasted Steel profiles. The decorations, also in clay, are the result of expert craftsmanship. Every frame is a unique and unrepeatable item.

WOOD

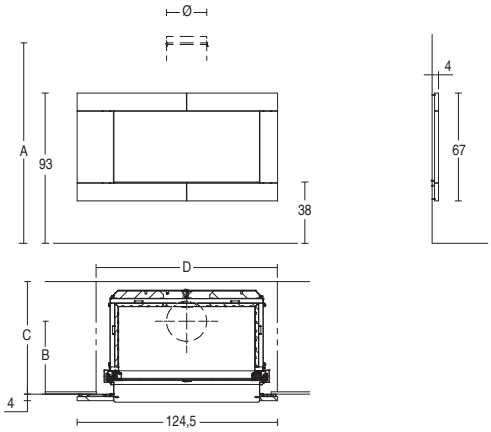

MOD.	A	B	C	D	Ø
MA 263 SL	154	39,5	59	112	25
MA 263 SL PLUS	194	39,5	69	122	25

MOD.	A	B	C	D	Ø
MA 263 B SL PLUS	194	30,3	60,6	122	20
MC 90/44	84	39	59	115	20

Ø Size should be checked during installation.

COLOUR	COMPATIBILITY	CODE	EURO
LE TERRE	MA 263 SL [1], MA 263 SL PLUS [1], MA 263 B SL PLUS [1], MC 90/44 [1]	P17054000C	5.880,00

If the Multifuoco System® is installed, you need to include vents in the false walling. The vents must be ordered separately.
[1] The compensation kit is required for installation with MA SL - MC.

OBLIGATORY ACCESSORIES	CODE	EURO
Compensation kit for MA263SL-MC90/44-MC90/44P	P08012840C	430,00

ACCESSORIES ON REQUEST	
Accessories - Certified pipes and bends for connecting the flue	refer to the end of the section regarding the chosen interior

Prices are considered to be without sales taxes. Gruppo Piazzetta S.p.A. reserves the right to modify and/or delete all printed material, if deemed necessary by Gruppo Piazzetta without any written or prior notice.
Document reserved for the Gruppo Piazzetta S.p.A. sales organisation.

I VENEZIANI

LIFE

Cladding made with large hand-crafted Majolica panels. In the photo, Nero Ingobbio with special items in crystalline glaze. Raised element and profiles in blasted steel.

WOOD PELLET

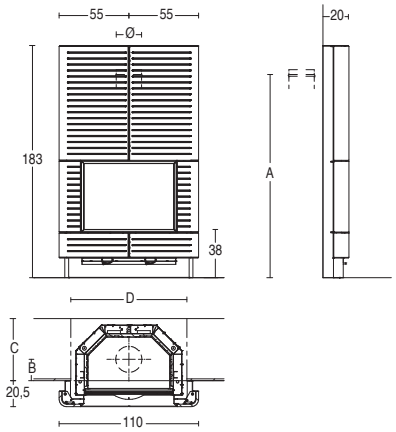

MOD.	A	B	C	D	Ø
MA 260 SL	157	24,5	46,5	90	20
MA 260 SL PLUS	197	24,5	56,5	100	20
MA 260 B SL	157	24,5	30,6	90	20

MOD.	A	B	C	D	Ø
MC 70/51	91	20,5	41,5	95	18
MC 70/51 SL	91	24,5	45,5	95	18
IP 7	80,5	29	39	82	8

MOD.	A	B	C	D	Ø
IP 7 M	80,5	29	39	82	8
MP 7	80,5	29	39	82	8

Ø Size should be checked during installation.

BASIC LINE

COLOUR	COMPATIBILITY	CODE	EURO
ARDESIA	MA 260 SL [2], MA 260 SL PLUS [2], MA 260 B SL [2] MC 70/51 [2], MC 70/51 SL [2], MA 260 [2], MA 260 SL [2], MA 260 SL PLUS [2], MA 260 B SL [2] MC 70/51 [2], MC 70/51 SL[2], MP 7 [1], IP 7 [1], IP 7 M [1]	P16086240C	1.790,00
BIANCO GRIGIO		P16086410C	1.790,00
BIANCO ANTICO		P16086640C	1.790,00
BIANCO		P16086300C	1.790,00
MATTONE		P160864A0C	1.790,00
KAKI		P16086990C	1.790,00
SAHARA		P16086220C	1.790,00
SENAPE		P160865A0C	1.790,00
TERRA COTTA		P16086090C	1.790,00
TORTORA		P160866A0C	1.790,00

ELEGANCE LINE

COLOUR	COMPATIBILITY	EURO
PENNELLATO	MA 260 SL [2], MA 260 SL PLUS [2], MA 260 B SL [2] MC 70/51 [2], MC 70/51 SL [2], MA 260 [2], MA 260 SL [2], MA 260 SL PLUS [2], MA 260 B SL [2] MC 70/51 [2], MC 70/51 SL[2], MP 7 [1], IP 7 [1], IP 7 M [1]	2.705,00
PENNELLATO DECORATO		3.515,00

LINEA LUXURY

COLOUR	COMPATIBILITY	EURO
ORO	MA 260 SL [2], MA 260 SL PLUS [2], MA 260 B SL [2] MC 70/51 [2], MC 70/51 SL [2], MA 260 [2], MA 260 SL [2], MA 260 SL PLUS [2], MA 260 B SL [2] MC 70/51 [2], MC 70/51 SL[2], MP 7 [1], IP 7 [1], IP 7 M [1]	6.760,00
PLATINO		6.760,00
RAME		4.810,00
ORO DECORATO		7.575,00
PLATINO DECORATO		7.575,00
RAME DECORATO		5.620,00

The raised element includes slits that allow the hot air from the Multifuoco System® to come through. The vents to be applied to the lining must be ordered separately.

[1] For installation with IP IP 7 - IP 7 M - MP, the compensation kit is essential. Incompatible with front pellet-loading tray.

[2] The kit containing special steel parts is required for installation with MA SL - MC - MC SL.

OBLIGATORY ACCESSORIES	CODE	EURO
LIFE kit containing special steel parts for MA260SL-MA260BSL-MC70/51-MC70/51SL	P08061220C	3.015,00
Kit of special LIFE steel items for IP7-IP7M-MP7	P08013250C	3.015,00
Compensation kit for IP 7 - IP 7 M - MP 7, NOT compatible with front pellet-loading tray	N08010021C	100,00
Compensation kit for IP 7 - IP 7 M - MP 7, NOT compatible with front pellet-loading tray	N08010033C	100,00

ACCESSORIES ON REQUEST	
Accessories - Certified pipes and bends for connecting the flue	refer to the end of the section regarding the chosen interior

Prices are considered to be without sales taxes. Gruppo Piazzetta S.p.A. reserves the right to modify and/or delete all printed material, if deemed necessary by Gruppo Piazzetta without any written or prior notice.
Document reserved for the Gruppo Piazzetta S.p.A. sales organisation.

I VENEZIANI

LINZ

Cladding and front panel in hand-crafted Majolica, with bas-relief decorations on the door that closes a storage tray. Profile in black-painted Steel. Not reversible.

WOOD

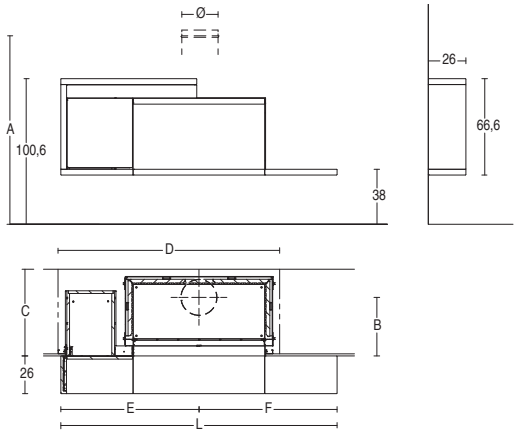

MOD.	A	B	C	D	E	F	L	Ø
MA 263 SL	154	40,5	60	148	95,5	95,5	191	25
MA 263 SL PLUS	194	40,5	70	158	95,5	95,5	191	25
MA 263 B SL PLUS	194	31	62	158	95,5	95,5	191	20

MOD.	A	B	C	D	E	F	L	Ø
MC 90/44	84	39	59	150	95,5	95,5	191	20
MC 90/44 SL	84	43	63	150	95,5	95,5	191	20
MA 264 SL	158	40,5	60	176	109,5	109,5	219	25

MOD.	A	B	C	D	E	F	L	Ø
MC 120/48	88	39	59	177	109,5	109,5	219	20
MC 120/48 SL	88	43	63	177	109,5	109,5	219	20

Ø Size should be checked during installation.

MONOCHROME VERSION

COLOUR	COMPATIBILITY	CODE	EURO
FRAME AND DOOR IN BIANCO GRIGIO	MA 263 SL, MA 263 SL PLUS, MA 263 B SL PLUS, MC 90/44, MC 90/44 SL	P18016410C	2.595,00
	MA 264 SL, MC 120/48, MC 120/48 SL	P18017410C	2.870,00

BI-COLOUR VERSION

COLOUR	COMPATIBILITY	CODE	EURO
FRAME IN GRIGIO FERRO / DOOR IN BIANCO GRIGIO	MA 263 SL, MA 263 SL PLUS, MA 263 B SL PLUS, MC 90/44, MC 90/44 SL	P18016412C	2.595,00
	MA 264 SL, MC 120/48, MC 120/48 SL	P18017412C	2.870,00
FRAME IN GRIGIO FERRO / DOOR IN GIALLO ACCESO	MA 263 SL, MA 263 SL PLUS, MA 263 B SL PLUS, MC 90/44, MC 90/44 SL	P18016262C	2.595,00
	MA 264 SL, MC 120/48, MC 120/48 SL	P18017262C	2.870,00

If the Multifuoco System® is installed, you need to include vents in the false walling. The vents must be ordered separately.

ACCESSORIES ON REQUEST	
Accessories - Certified pipes and bends for connecting the flue	refer to the end of the section regarding the chosen interior

Prices are considered to be without sales taxes. Gruppo Piazzetta S.p.A. reserves the right to modify and/or delete all printed material, if deemed necessary by Gruppo Piazzetta without any written or prior notice.
Document reserved for the Gruppo Piazzetta S.p.A. sales organisation.

I VENEZIANI

LIPSIA

Hand-crafted Majolica cladding. Profile in black- or grey-painted Steel.

WOOD PELLET

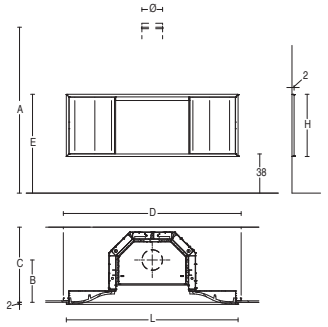

MOD.	A	B	C	D	E	L	H	Ø
MA 260 SL	157	48	70	171	95,5	165,5	60	20
MA 260 SL PLUS	197	48	80	181	95,5	165,5	60	20
MA 260 B SL	157	39	77,6	170,5	95,5	165,5	60	20
MA 263 SL	156	45,5	65	192,5	88,5	185,8	53	25
MA 263 SL PLUS	196	45,5	75	202,5	88,5	185,8	53	25
MA 263 B SL PLUS	196	36,3	72,6	206	88,5	185,8	53	20

MOD.	A	B	C	D	E	L	H	Ø
MA 264 SL	160	45,5	65	220,5	92,5	213,5	57	25
MC 70/51	91	44	64	172	95,5	165,5	60	18
MC 70/51 SL	91	48	68	172	95,5	165,5	60	18
MC 90/44	84	44	64	192	88,5	185,8	53	20
MC 90/44 P	130	44	64	192	88,5	185,8	53	20
MC 90/44 P	130	44	64	192	88,5	185,8	53	20

MOD.	A	B	C	D	E	L	H	Ø
MC 90/44 SL	84	48	68	192	88,5	185,8	53	20
MC 120/48	88	44	64	221	92,5	213,5	57	20
MC 120/48 SL	88	48	68	221	92,5	213,5	57	20
IP 7	80,5	44	54	172	95,5	213,5	60	8
IP 7 M	80,5	44	54	172	95,5	213,5	60	8
MP 7	80,5	44	54	172	95,5	213,5	60	8

Ø Size should be checked during installation.

COLOUR	COMPATIBILITY	CODE	EURO
BIANCO GRIGIO	MA 260 SL, MA 260 SL PLUS, MA 260 B SL, MC 70/51, MC 70/51 SL, MP 7 [1] IP 7 [1], IP 7 M [1]	P16014410C	635,00
	MA 263 SL, MC 90/44, MC 90/44 P, MC 90/44 SL	P16015410C	635,00
	MA 264 SL, MC 120/48, MC 120/48 SL	P16016410C	700,00
GIALLO ACCESO	MA 260 SL, MA 260 SL PLUS, MA 260 B SL, MC 70/51, MC 70/51 SL, MP 7 [1] IP 7 [1], IP 7 M [1]	P16014260C	635,00
	MA 263 SL, MC 90/44, MC 90/44 P, MC 90/44 SL	P16015260C	635,00
	MA 264 SL, MC 120/48, MC 120/48 SL	P16016260C	700,00
GRIGIO CERATO	MA 260 SL, MA 260 SL PLUS, MA 260 B SL, MC 70/51, MC 70/51 SL, MP 7 [1] IP 7 [1], IP 7 M [1]	P16014310C	635,00
	MA 263 SL, MC 90/44, MC 90/44 P, MC 90/44 SL	P16015310C	635,00
	MA 264 SL, MC 120/48, MC 120/48 SL	P16016310C	700,00
ROSSO LAVA	MA 260 SL, MA 260 SL PLUS, MA 260 B SL, MC 70/51, MC 70/51 SL, MP 7 [1] IP 7 [1], IP 7 M [1]	P16014450C	635,00
	MA 263 SL, MC 90/44, MC 90/44 P, MC 90/44 SL	P16015450C	635,00
	MA 264 SL, MC 120/48, MC 120/48 SL	P16016450C	700,00
GREY-PAINTED PROFILE	MA 260 SL, MA 260 SL PLUS, MA 260 B SL, MC 70/51, MC 70/51 SL, MP 7 [1] IP 7 [1], IP 7 M [1]	P08014580C	545,00
	MA 263 SL, MC 90/44, MC 90/44 P, MC 90/44 SL	P08014600C	545,00
	MA 264 SL, MC 120/48, MC 120/48 SL	P08014610C	545,00
BLACK-PAINTED PROFILE	MA 260 SL, MA 260 SL PLUS, MA 260 B SL, MC 70/51, MC 70/51 SL, MP 7 [1] IP 7 [1], IP 7 M [1]	P08014570C	545,00
	MA 263 SL, MC 90/44, MC 90/44 P, MC 90/44 SL	P08014590C	545,00
	MA 264 SL, MC 120/48, MC 120/48 SL	P08014620C	545,00

If the Multifuoco System® is installed, you need to include vents in the false walling. The vents must be ordered separately.

[1] For installation with IP 7 - IP 7 M - MP 7, the compensation kit is essential.

OBLIGATORY ACCESSORIES	CODE	EURO
Compensation kit for IP 7, NOT compatible with front pellet-loading tray	N08010021C	100,00
Compensation kit for IP 7 M - MP 7, NOT compatible with front pellet-loading tray	N08010033C	100,00

ACCESSORIES ON REQUEST	
Accessories - Certified pipes and bends for connecting the flue	refer to the end of the section regarding the chosen interior

Prices are considered to be without sales taxes. Gruppo Piazzetta S.p.A. reserves the right to modify and/or delete all printed material, if deemed necessary by Gruppo Piazzetta without any written or prior notice.
Document reserved for the Gruppo Piazzetta S.p.A. sales organisation.

I VENEZIANI

LITHOS

Hand-crafted clay cladding, blasted Steel profiles. The decorations, also in clay, are the result of expert craftsmanship. Every frame is a unique and unrepeatable item.

WOOD PELLET

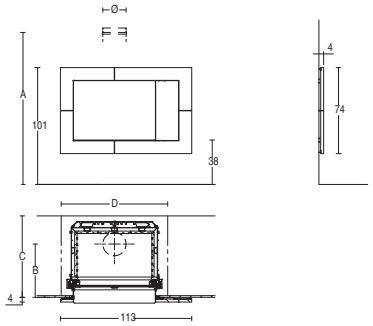

MOD.	A	B	C	D	Ø
MA 260 SL	156,5	42	64	90	20
MA 260 SL PLUS	196,5	42	74	100	20
MA 260 B SL	155	32,8	65,6	91,5	20

MOD.	A	B	C	D	Ø
MC 70/51	91	38	58	95	18
MC 70/51 SL	91	42	62	95	18
IP 7	80,5	44	54	78	8

MOD.	A	B	C	D	Ø
IP 7 M	80,5	44	54	78	8
MP 7	80,5	44	54	78	8

Ø Size should be checked during installation.

COLOUR	COMPATIBILITY	CODE	EURO
LE TERRE	MA 260 SL [2], MA 260 SL PLUS [2], MA 260 B SL [2], MC 70/51 [2], MC 70/51 SL [2], MP 7 [1] IP 7 [1], IP 7 M [1]	P17051000C	5.370,00

If the Multifuoco System® is installed, you need to include vents in the false walling. The vents must be ordered separately.
[1] For installation with IP IP 7 - IP 7 M - MP, the compensation kit is essential. Incompatible with front pellet-loading tray.
[2] The compensation kit is required for installation with MA SL - MA SL PLUS - MC - MC SL.

OBLIGATORY ACCESSORIES	CODE	EURO
Compensation kit for MA260SL-MA260BSL-MC70/51-MC70/51SL-600HT-MT600	P08013730C	430,00
Compensation kit for IP 7, NOT compatible with front pellet-loading tray	N08010021C	100,00
Compensation kit for IP 7 M - MP 7, NOT compatible with front pellet-loading tray	N08010033C	100,00

ACCESSORIES ON REQUEST	
Accessories - Certified pipes and bends for connecting the flue	refer to the end of the section regarding the chosen interior

Prices are considered to be without sales taxes. Gruppo Piazzetta S.p.A. reserves the right to modify and/or delete all printed material, if deemed necessary by Gruppo Piazzetta without any written or prior notice.
Document reserved for the Gruppo Piazzetta S.p.A. sales organisation.

I VENEZIANI

LUBECCA

Cladding in hand-crafted Majolica, made in a single element with bas-relief decorations.

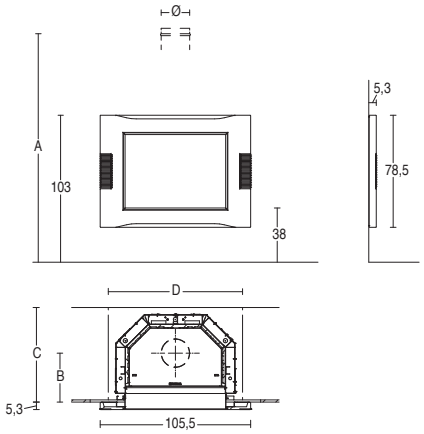

MOD.	A	B	C	D	Ø
MA 260 SL	157	42	64	90	20
MA 260 SL PLUS	197	42	74	100	20
MA 260 B SL	158,5	42	65,6	90	20

MOD.	A	B	C	D	Ø
MC 70/51	91	38	58	94	18
MC 70/51 SL	91	42	62	94	18

Ø Size should be checked during installation.

COLOUR	COMPATIBILITY	CODE	EURO
BIANCO GRIGIO	MA 260 SL, MA 260 SL PLUS, MA 260 B SL, MC 70/51, MC 70/51 SL	P16044410C	1.020,00
GIALLO ACCESO		P16044260C	1.020,00
GRIGIO CERATO		P16044310C	1.020,00
ROSSO LAVA		P16044450C	1.020,00

If the Multifuoco System® is installed, you need to include vents in the false walling. The vents must be ordered separately.

ACCESSORIES ON REQUEST	
Accessories - Certified pipes and bends for connecting the flue	refer to the end of the section regarding the chosen interior

Prices are considered to be without sales taxes. Gruppo Piazzetta S.p.A. reserves the right to modify and/or delete all printed material, if deemed necessary by Gruppo Piazzetta without any written or prior notice.
Document reserved for the Gruppo Piazzetta S.p.A. sales organisation.

I VENEZIANI

MELBOURNE

Cladding consisting of symmetrical elements which come together and embrace the fire. The large-sized Majolica panels combine with each other and harmoniously exalt the view of the fire.

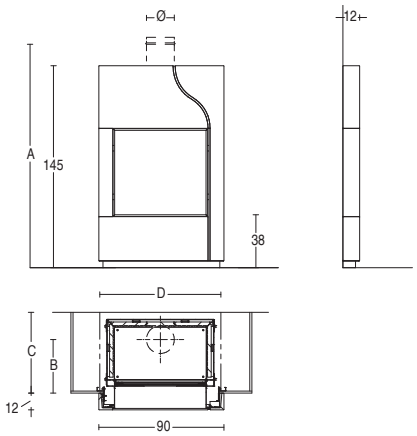

MOD.	A	B	C	D	Ø
MC 65/60	100	21	42	79	18

MOD.	A	B	C	D	Ø
MC 65/60 P	146	21	42	79	18
MC 65/60 SL	100	41	61	84	18

Ø Size should be checked during installation.

MONOCHROME VERSION

COLOUR	COMPATIBILITY	CODE	EURO
ARDESIA	MC 65/60, MC 65/60 P [1], MC 65/60 SL [1]	P18060240C	3.280,00
BIANCO		P18060300C	3.280,00
BIANCO ANTICO		P18060640C	3.280,00
BIANCO GRIGIO		P18060410C	3.280,00
KAKI		P18060990C	3.280,00
MATTONE		P180604A0C	3.280,00
SAHARA		P18060220C	3.280,00
SENAPE		P180605A0C	3.280,00
TERRA COTTA		P18060090C	3.280,00
TORTORA		P180606A0C	3.280,00

BI-COLOUR VERSION [2]

COLOUR	COMPATIBILITY	CODE	EURO
RH ELEMENT SENAPE LH PANEL BIANCO ANTICO	MC 65/60, MC 65/60 P [1], MC 65/60 SL [1]	P180605A1C	3.280,00
RH ELEMENT TERRA COTTA LH PANEL BIANCO ANTICO		P18060091C	3.280,00
RH ELEMENT TORTORA LH PANEL BIANCO ANTICO		P180606A1C	3.280,00

If the Multifuoco System® is installed, you need to include vents in the false walling. The vents must be ordered separately.

[1] The compensation kit is required for installation with MA - MC.

[2] Other colour combinations are available upon request. For further information, refer to the information at the beginning of section “I VENEZIANI”.

OBLIGATORY ACCESSORIES	CODE	EURO
Compensation kit for MC65/60-MC65/60P-MC65/60SL	P08060340C	370,00

ACCESSORIES ON REQUEST	
Accessories - Certified pipes and bends for connecting the flue	refer to the end of the section regarding the chosen interior

Prices are considered to be without sales taxes. Gruppo Piazzetta S.p.A. reserves the right to modify and/or delete all printed material, if deemed necessary by Gruppo Piazzetta without any written or prior notice.
Document reserved for the Gruppo Piazzetta S.p.A. sales organisation.

I VENEZIANI

MELBOURNE

Cladding consisting of symmetrical elements which come together and embrace the fire. The large-sized Majolica panels combine with each other and harmoniously exalt the view of the fire.

PELLET THERMO

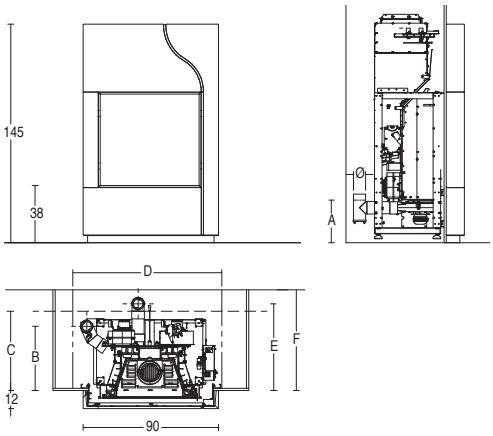

MOD.	A	B	C	D	E	F	Ø
MP 973 TH	34	49	66	104	-	-	10

Ø Size should be checked during installation.

MONOCHROME VERSION

COLOUR	COMPATIBILITY	CODE	EURO
ARDESIA	MP 973 TH [1], MP 973 TH ACS [1]	P18060240C	3.280,00
BIANCO		P18060300C	3.280,00
BIANCO ANTICO		P18060640C	3.280,00
BIANCO GRIGIO		P18060410C	3.280,00
KAKI		P18060990C	3.280,00
MATTONE		P180604A0C	3.280,00
SAHARA		P18060220C	3.280,00
SENAPE		P180605A0C	3.280,00
TERRA COTTA		P18060090C	3.280,00
TORTORA		P180606A0C	3.280,00

BI-COLOUR VERSION [2]

COLOUR	COMPATIBILITY	CODE	EURO
RH ELEMENT SENAPE LH PANEL BIANCO ANTICO	MP 973 TH [1], MP 973 TH ACS [1]	P180605A1C	3.280,00
RH ELEMENT TERRA COTTA LH PANEL BIANCO ANTICO		P18060091C	3.280,00
RH ELEMENT TORTORA LH PANEL BIANCO ANTICO		P180606A1C	3.280,00

[1] The compensation kit is required for installation with MP TH.

[2] Other colour combinations are available upon request. For further information, refer to the information at the beginning of section “I VENEZIANI”.

OBLIGATORY ACCESSORIES	CODE	EURO
Compensation kit for MP973TH-MP973THACS	P08060330C	370,00

ACCESSORIES ON REQUEST	
Accessories - Certified pipes and bends for connecting the flue	refer to the end of the section regarding the chosen interior

Prices are considered to be without sales taxes. Gruppo Piazzetta S.p.A. reserves the right to modify and/or delete all printed material, if deemed necessary by Gruppo Piazzetta without any written or prior notice.
Document reserved for the Gruppo Piazzetta S.p.A. sales organisation.

I VENEZIANI

MOOD

Cladding in hand-crafted Majolica, blasted Steel profiles. In the photo: Grigio Rosso enriched with brush stroke detailing in matching crystalline glaze.

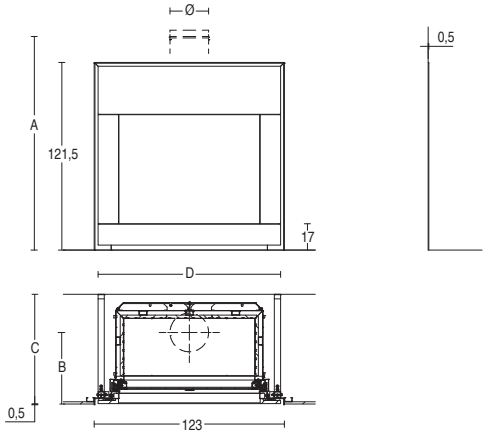

MOD.	A	B	C	D	Ø
MA 262 SL	160,5	40,5	71	118	25

MOD.	A	B	C	D	Ø
MA 262 SL PLUS	186,5	40,5	76	128	25

Ø Size should be checked during installation.

BASIC LINE

COLOUR	COMPATIBILITY	CODE	EURO
ARDESIA	MA 262 SL, MA 262 SL PLUS	P16058240C	4.375,00
BIANCO GRIGIO		P16058410C	4.375,00
BIANCO ANTICO		P16058640C	4.375,00
BIANCO		P16058300C	4.375,00
MATTONE		P160584A0C	4.375,00
KAKI		P16058990C	4.375,00
SAHARA		P16058220C	4.375,00
SENAPE		P160585A0C	4.375,00
TERRA COTTA		P16058090C	4.375,00
TORTORA		P160586A0C	4.375,00

ELEGANCE LINE

COLOUR	COMPATIBILITY	EURO
PENNELLATO	MA 262 SL, MA 262 SL PLUS	6.565,00
PENNELLATO DECORATO		7.390,00
PENNELLATO DAMASCATO		8.200,00

LINEA LUXURY

COLOUR	COMPATIBILITY	EURO
ORO	MA 262 SL, MA 262 SL PLUS	8.375,00
PLATINO		8.375,00
RAME		7.490,00
ORO DECORATO		9.190,00
PLATINO DECORATO		9.190,00
RAME DECORATO		8.315,00
ORO DAMASCATO		10.005,00
PLATINO DAMASCATO		10.005,00
RAME DAMASCATO		9.130,00

If the Multifuoco System® is installed, you need to include vents in the false walling. The vents must be ordered separately.

ACCESSORIES ON REQUEST

Accessories - Certified pipes and bends for connecting the flue	refer to the end of the section regarding the chosen interior

Prices are considered to be without sales taxes. Gruppo Piazzetta S.p.A. reserves the right to modify and/or delete all printed material, if deemed necessary by Gruppo Piazzetta without any written or prior notice.
Document reserved for the Gruppo Piazzetta S.p.A. sales organisation.

I VENEZIANI

NEW ORLEANS

Cladding in hand-crafted Majolica, made in a single element.

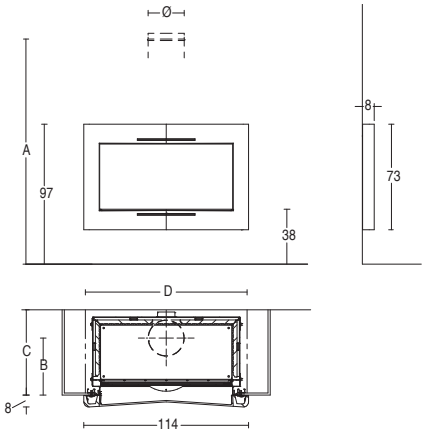

MOD.	A	B	C	D	Ø
MA 263 SL	156	39,5	59	112,5	25
MA 263 SL PLUS	196	39,5	69	122,5	25
MA 263 B SL PLUS	196	30	60,6	122	20

MOD.	A	B	C	D	Ø
MC 90/44	84	38	58	116	20
MC 90/44 SL	84	42	62	116	20

Ø Size should be checked during installation.

COLOUR	COMPATIBILITY	CODE	EURO
NEVE	MA 263 SL [1], MA 263 SL PLUS [1], MA 263 B SL PLUS [1], MC 90/44 [1], MC 90/44 SL [1]	P16050650C	995,00
GRIGIO FERRO		P16050910C	995,00
MOKA		P16050890C	995,00

If the Multifuoco System® is installed, you need to include vents in the false walling. The vents must be ordered separately.
[1] The compensation kit is required for installation with MA - MC.

OBLIGATORY ACCESSORIES	CODE	EURO
Compensation kit for MA263SL-MC90/44-MC90/44P-MC90/44SL	P08013290C	430,00

ACCESSORIES ON REQUEST	
Accessories - Certified pipes and bends for connecting the flue	refer to the end of the section regarding the chosen interior

Prices are considered to be without sales taxes. Gruppo Piazzetta S.p.A. reserves the right to modify and/or delete all printed material, if deemed necessary by Gruppo Piazzetta without any written or prior notice.
Document reserved for the Gruppo Piazzetta S.p.A. sales organisation.

I VENEZIANI

NEWPORT

Cladding consisting of two elements in fine, hand-crafted Majolica. The raised element is in steel and has slits which allow the hot air to come through the front. The side shelves are in black-painted Steel.

WOOD

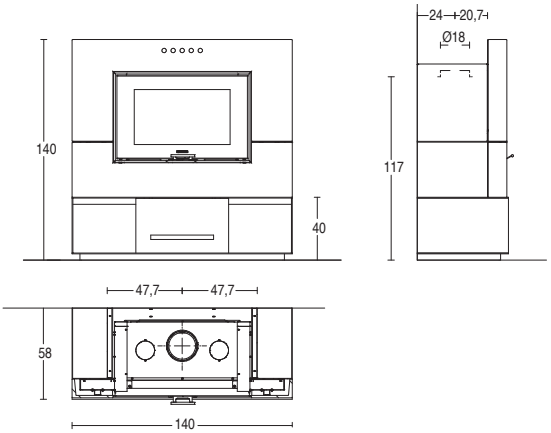

Ø Size should be checked during installation.

COLOUR	COMPATIBILITY	CODE	EURO
ARDESIA	MC 85/55 BL	P18038240C	4.590,00
BIANCO		P18038300C	4.590,00
BIANCO ANTICO		P18038640C	4.590,00
BIANCO GRIGIO		P18038410C	4.590,00
KAKI		P18038990C	4.590,00
MATTONE		P180384A0C	4.590,00
SAHARA		P18038220C	4.590,00
SENAPE		P180385A0C	4.590,00
TERRA COTTA		P18038090C	4.590,00
TORTORA		P180386A0C	4.590,00

The raised element includes slits that allow the hot air from the Multifuoco System® to come through.

ACCESSORIES ON REQUEST	
Accessories - Certified pipes and bends for connecting the flue	refer to the end of the section regarding the chosen interior

Prices are considered to be without sales taxes. Gruppo Piazzetta S.p.A. reserves the right to modify and/or delete all printed material, if deemed necessary by Gruppo Piazzetta without any written or prior notice.
Document reserved for the Gruppo Piazzetta S.p.A. sales organisation.

I VENEZIANI

PALEO

Hand-crafted clay cladding, blasted Steel profiles. The decorations, also in clay, are the result of expert craftsmanship. Every frame is a unique and unrepeatable item.

WOOD PELLET

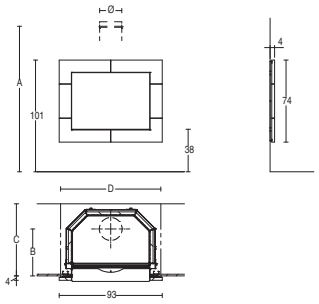

MOD.	A	B	C	D	Ø
MA 260 SL	156,5	42	64	90	20
MA 260 SL PLUS	196,5	42	74	100	20
MA 260 B SL	155	32,8	65,6	91,5	20

MOD.	A	B	C	D	Ø
MC 70/51	91	38	58	95	18
MC 70/51 SL	91	42	62	95	18
IP 7	80,5	44	54	78	8

MOD.	A	B	C	D	Ø
IP 7 M	80,5	44	54	78	8
MP 7	80,5	44	54	78	8

Ø Size should be checked during installation.

COLOUR	COMPATIBILITY	CODE	EURO
LE TERRE	MA 260 SL [2], MA 260 SL PLUS [2], MA 260 B SL [2] MC 70/51 [2], MC 70/51 SL [2], MP 7 [1], IP 7 [1], IP 7 M [1]	P17050000C	4.370,00

If the Multifuoco System® is installed, you need to include vents in the false walling. The vents must be ordered separately.
[1] For installation with IP IP 7 - IP 7 M - MP, the compensation kit is essential. Incompatible with front pellet-loading tray.
[2] The compensation kit is required for installation with MA SL - MA SL PLUS - MC - MC SL.

OBLIGATORY ACCESSORIES	CODE	EURO
Compensation kit for MA260SL-MA260BSL-MC70/51-MC70/51SL	P08013730C	430,00
Compensation kit for IP 7, NOT compatible with front pellet-loading tray	N08010021C	100,00
Compensation kit for IP 7 M - MP 7, NOT compatible with front pellet-loading tray	N08010033C	100,00

ACCESSORIES ON REQUEST	
Accessories - Certified pipes and bends for connecting the flue	refer to the end of the section regarding the chosen interior

Prices are considered to be without sales taxes. Gruppo Piazzetta S.p.A. reserves the right to modify and/or delete all printed material, if deemed necessary by Gruppo Piazzetta without any written or prior notice.
Document reserved for the Gruppo Piazzetta S.p.A. sales organisation.

I VENEZIANI

PHILADELPHIA

Cladding in hand-crafted Majolica, blasted Steel profiles. In the photo: Platino finish with fine texture enriched with crystalline glaze.

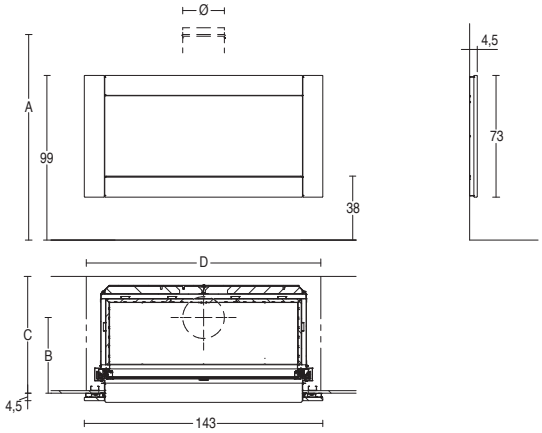

MOD.	A	B	C	D	Ø
MA 264 SL	160	39,5	59	140,5	25

MOD.	A	B	C	D	Ø
MC 120/48	88	38	58	143	20

Ø Size should be checked during installation.

BASIC LINE

COLOUR	COMPATIBILITY	CODE	EURO
ARDESIA	MA 264 SL [1], MC 120/48 [1]	P16072240C	1.915,00
BIANCO GRIGIO		P16072410C	1.915,00
BIANCO ANTICO		P16072640C	1.915,00
BIANCO		P16072300C	1.915,00
MATTONE		P160724A0C	1.915,00
KAKI		P16072990C	1.915,00
SAHARA		P16072220C	1.915,00
SENAPE		P160725A0C	1.915,00
TERRA COTTA		P16072090C	1.915,00
TORTORA		P160726A0C	1.915,00

ELEGANCE LINE

COLOUR	COMPATIBILITY	EURO
PENNELLATO	MA 264 SL [1], MC 120/48 [1]	2.860,00
PENNELLATO DECORATO		3.685,00

LINEA LUXURY

COLOUR	COMPATIBILITY	EURO
ORO	MA 264 SL [1], MC 120/48 [1]	4.445,00
PLATINO		4.445,00
RAME		3.685,00
ORO DECORATO		5.270,00
PLATINO DECORATO		5.270,00
RAME DECORATO		4.505,00

If the Multifuoco System® is installed, you need to include vents in the false walling. The vents must be ordered separately.
[1] The compensation kit is required for installation with MA SL - MC.

OBLIGATORY ACCESSORIES	CODE	EURO
Compensation kit for MA264SL-MC120/48	P08013100C	430,00

ACCESSORIES ON REQUEST

Accessories - Certified pipes and bends for connecting the flue	refer to the end of the section regarding the chosen interior

Prices are considered to be without sales taxes. Gruppo Piazzetta S.p.A. reserves the right to modify and/or delete all printed material, if deemed necessary by Gruppo Piazzetta without any written or prior notice.
Document reserved for the Gruppo Piazzetta S.p.A. sales organisation.

I VENEZIANI

PHOENIX

Hand-crafted cladding in Majolica, blasted Steel profiles. In the photo: Tortora enriched with crystalline glaze on side crescents.

WOOD

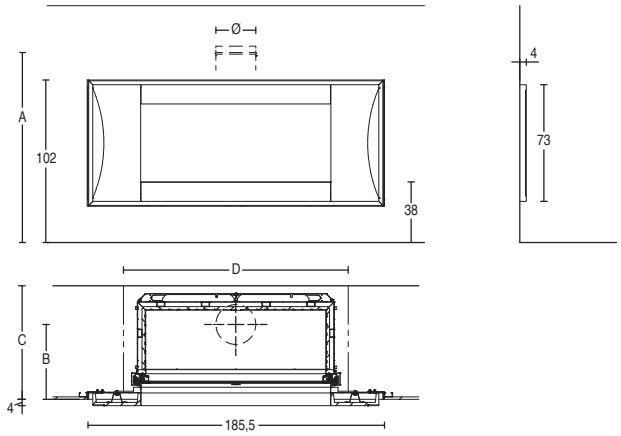

MOD.	A	B	C	D	Ø
MA 264 SL	160	41	60,5	140,5	25
MC 120/48	88	39,5	59,5	145	20

MOD.	A	B	C	D	Ø
MC 120/48 SL	88	43,5	63,5	145	20

Ø Size should be checked during installation.

BASIC LINE

COLOUR	COMPATIBILITY	CODE	EURO
ARDESIA	MA 264 SL, MC 120/48, MC 120/48 SL	P16049240C	1.410,00
BIANCO GRIGIO		P16049410C	1.410,00
BIANCO ANTICO		P16049640C	1.410,00
BIANCO		P16049300C	1.410,00
MATTONE		P160494A0C	1.410,00
KAKI		P16049990C	1.410,00
SAHARA		P16049220C	1.410,00
SENAPE		P160495A0C	1.410,00
TERRA COTTA		P16049090C	1.410,00
TORTORA		P160496A0C	1.410,00

ELEGANCE LINE

COLOUR	COMPATIBILITY	EURO
PENNELLATO	MA 264 SL, MC 120/48, MC 120/48 SL	2.115,00
PENNELLATO DECORATO		2.935,00
PENNELLATO DAMASCATO		3.745,00

LINEA LUXURY

COLOUR	COMPATIBILITY	EURO
ORO	MA 264 SL, MC 120/48, MC 120/48 SL	4.150,00
PLATINO		4.150,00
RAME		3.165,00
ORO DECORATO		4.960,00
PLATINO DECORATO		4.960,00
RAME DECORATO		3.985,00
ORO DAMASCATO		5.780,00
PLATINO DAMASCATO		5.780,00
RAME DAMASCATO		4.810,00

If the Multifuoco System® is installed, you need to include vents in the false walling. The vents must be ordered separately.

OBLIGATORY ACCESSORIES	CODE	EURO
Special PHOENIX items in steel	P08013770C	1.575,00

ACCESSORIES ON REQUEST	
Accessories - Certified pipes and bends for connecting the flue	refer to the end of the section regarding the chosen interior

Prices are considered to be without sales taxes. Gruppo Piazzetta S.p.A. reserves the right to modify and/or delete all printed material, if deemed necessary by Gruppo Piazzetta without any written or prior notice.
Document reserved for the Gruppo Piazzetta S.p.A. sales organisation.

I VENEZIANI

PRESTON

Cladding with base, front panel and shelves in hand-crafted Majolica. Structure in black-painted Steel.

WOOD

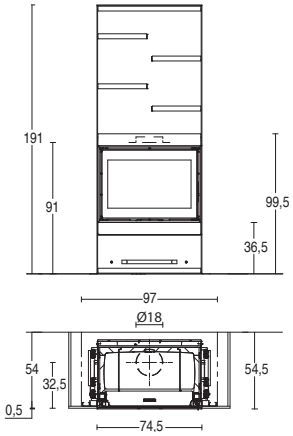

Ø Size should be checked during installation.

COLOUR	COMPATIBILITY	CODE	EURO
ARDESIA	MC 70/51	P18055240C	4.280,00
BIANCO ANTICO		P18055640C	4.280,00
BIANCO GRIGIO		P18055410C	4.280,00
KAKI		P18055990C	4.280,00
MATTONE		P180554A0C	4.280,00
SAHARA		P18055220C	4.280,00
SENAPE		P180555A0C	4.280,00
TERRA COTTA		P18055090C	4.280,00
TORTORA		P180556A0C	4.280,00

The raised element includes slits that allow the hot air from the Multifuoco System® to come through. The vents are included in the cladding.

ACCESSORIES ON REQUEST	
Accessories - Certified pipes and bends for connecting the flue	refer to the end of the section regarding the chosen interior

Prices are considered to be without sales taxes. Gruppo Piazzetta S.p.A. reserves the right to modify and/or delete all printed material, if deemed necessary by Gruppo Piazzetta without any written or prior notice.
Document reserved for the Gruppo Piazzetta S.p.A. sales organisation.

I VENEZIANI

SALISBURGO

Hand-crafted Majolica cladding with bas-relief decorations.

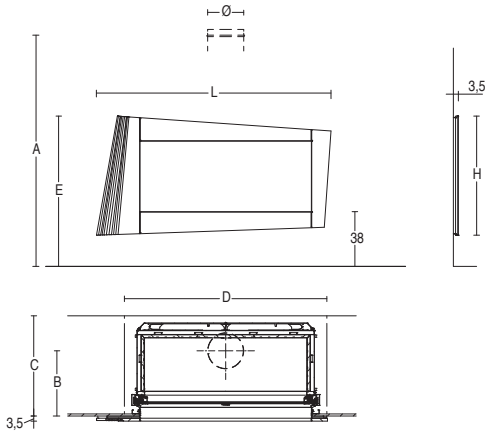

MOD.	A	B	C	D	E	L	H	Ø
MA 263 SL	154	39,5	59	112	101	135	79	25
MA 263 SL PLUS	194	39,5	69	122	101	135	79	25
MA 263 B SL PLUS	196	303	60,6	122	101	135	79	20

MOD.	A	B	C	D	E	L	H	Ø
MA 264 SL	158,5	39,5	59	140	105	163	83	25
MC 90/44	84	38	58	117,5	101	135	79	20
MC 90/44 SL	84	42	62	117,5	101	135	79	20

MOD.	A	B	C	D	E	L	H	Ø
MC 120/48	88	38	58	147,5	105	163	83	20
MC 120/48 SL	88	42	62	147,5	105	163	83	20

Ø Size should be checked during installation.

COLOUR	COMPATIBILITY	CODE	EURO
BIANCO ANTICO	MA 263 SL, MA 263 SL PLUS, MA 263 B SL PLUS, MC 90/44, MC 90/44 SL	P16007640C	1.250,00
	MA 264 SL, MC 120/48, MC 120/48 SL	P16008640C	1.375,00
GRIGIO CERATO	MA 263 SL, MA 263 SL PLUS, MA 263 B SL PLUS, MC 90/44, MC 90/44 SL	P16007310C	1.250,00
	MA 264 SL, MC 120/48, MC 120/48 SL	P16008310C	1.375,00

If the Multifuoco System® is installed, you need to include vents in the false walling. The vents must be ordered separately.

ACCESSORIES ON REQUEST	
Accessories - Certified pipes and bends for connecting the flue	refer to the end of the section regarding the chosen interior

Prices are considered to be without sales taxes. Gruppo Piazzetta S.p.A. reserves the right to modify and/or delete all printed material, if deemed necessary by Gruppo Piazzetta without any written or prior notice.
Document reserved for the Gruppo Piazzetta S.p.A. sales organisation.

I VENEZIANI

SAN DIEGO

Cladding in large panels of hand-crafted Majolica, blasted Steel profiles. In the photo: Bianco Setolato with details in crystalline glaze.

WOOD

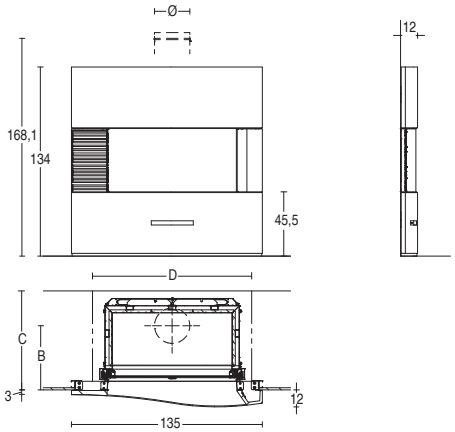

MOD.	A	B	C	D	Ø
MA 263 SL	163,5	39,5	59	112,5	25
MA 263 SL PLUS	203,5	39,5	69	122,5	25
MA 263 B SL PLUS	203,5	30	60,6	122	20

MOD.	A	B	C	D	Ø
MC 90/44	91,5	38	58	116	20
MC 90/44 SL	91,5	42	62	116	20

Ø Size should be checked during installation.

BASIC LINE

COLOUR	COMPATIBILITY	CODE	EURO
ARDESIA	MA 263 SL, MA 263 SL PLUS, MA 263 B SL PLUS, MC 90/44, MC 90/44 SL	P16057240C	2.110,00
BIANCO GRIGIO		P16057410C	2.110,00
BIANCO ANTICO		P16057640C	2.110,00
BIANCO		P16057300C	2.110,00
MATTONE		P160574A0C	2.110,00
KAKI		P16057990C	2.110,00
SAHARA		P16057220C	2.110,00
SENAPE		P160575A0C	2.110,00
TERRA COTTA		P16057090C	2.110,00
TORTORA		P160576A0C	2.110,00

ELEGANCE LINE

COLOUR	COMPATIBILITY	EURO
PENNELLATO	MA 263 SL, MA 263 SL PLUS, MA 263 B SL, MA 263 B SL PLUS, MC 90/44, MC 90/44 SL	3.165,00
PENNELLATO DECORATO		4.395,00
PENNELLATO DAMASCATO		4.810,00

LINEA LUXURY

COLOUR	COMPATIBILITY	EURO
ORO	MA 263 SL, MA 263 SL PLUS, MA 263 B SL, MA 263 B SL PLUS, MC 90/44, MC 90/44 SL	6.100,00
PLATINO		6.100,00
RAME		4.700,00
ORO DECORATO		7.325,00
PLATINO DECORATO		7.325,00
RAME DECORATO		5.925,00
ORO DAMASCATO		7.740,00
PLATINO DAMASCATO		7.740,00
RAME DAMASCATO		6.330,00

The raised element includes slits that allow the hot air from the Multifuoco System® to come through. The vents are included in the cladding.

OBLIGATORY ACCESSORIES	CODE	EURO
P08013980C	P08013980C	3.080,00

ACCESSORIES ON REQUEST	
Accessories - Certified pipes and bends for connecting the flue	refer to the end of the section regarding the chosen interior

Prices are considered to be without sales taxes. Gruppo Piazzetta S.p.A. reserves the right to modify and/or delete all printed material, if deemed necessary by Gruppo Piazzetta without any written or prior notice.
Document reserved for the Gruppo Piazzetta S.p.A. sales organisation.

I VENEZIANI

SHEFFIELD

Cladding with base in hand-crafted Majolica, made in a single unit. Profile and raised element in black-painted Steel.

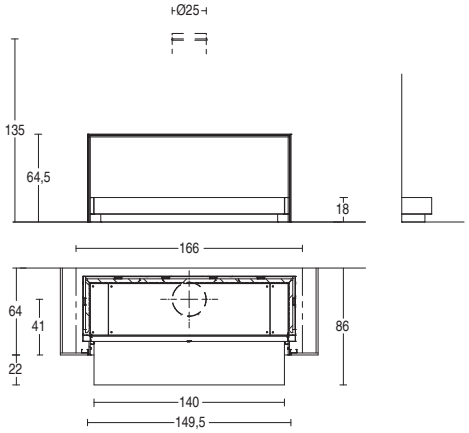

Ø Size should be checked during installation.

COLOUR	COMPATIBILITY	CODE	EURO
ARDESIA	MA 265 SL	P18045240C	2.185,00
BIANCO ANTICO		P18045640C	2.185,00
BIANCO GRIGIO		P18045410C	2.185,00
KAKI		P18045990C	2.185,00
MATTONE		P180454A0C	2.185,00
SAHARA		P18045220C	2.185,00
SENAPE		P180455A0C	2.185,00
TERRA COTTA		P18045090C	2.185,00
TORTORA		P180456A0C	2.185,00

You cannot use the feet kit for the installation.

ACCESSORIES ON REQUEST	
Accessories - Certified pipes and bends for connecting the flue	refer to the end of the section regarding the chosen interior

Prices are considered to be without sales taxes. Gruppo Piazzetta S.p.A. reserves the right to modify and/or delete all printed material, if deemed necessary by Gruppo Piazzetta without any written or prior notice.
Document reserved for the Gruppo Piazzetta S.p.A. sales organisation.

I VENEZIANI

SHUTTLE

Cladding made in hand-crafted Majolica. In the photo, Corallo with special details in crystalline glaze. Raised element and profiles in blasted steel.

WOOD PELLET

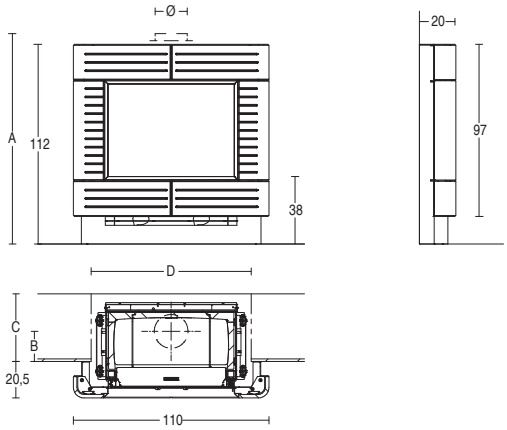

MOD.	A	B	C	D	Ø
MC 70/51	91	17	38	95	18

MOD.	A	B	C	D	Ø
IP 7	80,5	29	39	82	8

MOD.	A	B	C	D	Ø
IP 7 M	80,5	29	39	82	8
MP 7	80,5	29	39	82	8

Ø Size should be checked during installation.

BASIC LINE

COLOUR	COMPATIBILITY	CODE	EURO
ARDESIA	MC 70/51, MP 7 [1], IP 7 [1], IP 7 M [1]	P16085240C	1.355,00
BIANCO GRIGIO		P16085410C	1.355,00
BIANCO ANTICO		P16085640C	1.355,00
BIANCO		P16085300C	1.355,00
MATTONE		P160854A0C	1.355,00
KAKI		P16085990C	1.355,00
SAHARA		P16085220C	1.355,00
SENAPE		P160855A0C	1.355,00
TERRA COTTA		P16085090C	1.355,00
TORTORA		P160856A0C	1.355,00

ELEGANCE LINE

COLOUR	COMPATIBILITY	EURO
PENNELLATO	MC 70/51, MP 7 [1], IP 7 [1], IP 7 M [1]	2.040,00
PENNELLATO DECORATO		2.860,00

LINEA LUXURY

COLOUR	COMPATIBILITY	EURO
ORO	MC 70/51, MP 7 [1], IP 7 [1], IP 7 M [1]	4.300,00
PLATINO		4.300,00
RAME		3.205,00
ORO DECORATO		5.115,00
PLATINO DECORATO		5.115,00
RAME DECORATO		4.025,00

The raised element includes slits that allow the hot air from the Multifuoco System® to come through. The vents to be applied to the lining must be ordered separately.

[1] For installation with IP 7, the compensation kit is essential. Compatible with front pellet-loading tray.

OBLIGATORY ACCESSORIES	CODE	EURO
Special SHUTTLE items in steel	P08013220C	2.430,00
Compensation kit for IP 7, compatible with front pellet-loading tray	N08010022C	125,00
Compensation kit for IP 7 M - MP 7, compatible with front pellet-loading tray	N08010034C	125,00

ACCESSORIES ON REQUEST

Accessories - Certified pipes and bends for connecting the flue	refer to the end of the section regarding the chosen interior

Prices are considered to be without sales taxes. Gruppo Piazzetta S.p.A. reserves the right to modify and/or delete all printed material, if deemed necessary by Gruppo Piazzetta without any written or prior notice.
Document reserved for the Gruppo Piazzetta S.p.A. sales organisation.

I VENEZIANI

SHUTTLE 1

Cladding made in hand-crafted Majolica. In the photo, Nero Ingobbio with special details in crystalline glaze. Raised element and profiles in blasted steel and gas flue casing in blasted steel, available in the wall- or ceiling-mounted versions.

WOOD PELLET

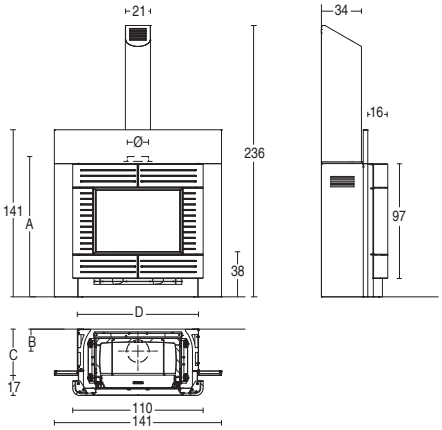

MOD.	A	B	C	D	Ø
MC 70/51	91	18,5	39	102	18

MOD.	A	B	C	D	Ø
IP 7	80,5	8,5	39	102	8

MOD.	A	B	C	D	Ø
IP 7 M	80,5	8,5	39	102	8
MP 7	80,5	8,5	39	102	8

Ø Size should be checked during installation.

BASIC LINE

COLOUR	COMPATIBILITY	CODE	EURO
ARDESIA	MC 70/51, MP 7 [1], IP 7 [1], IP 7 M [1]	P16085240C	1.355,00
BIANCO GRIGIO		P16085410C	1.355,00
BIANCO ANTICO		P16085640C	1.355,00
BIANCO		P16085300C	1.355,00
MATTONE		P160854A0C	1.355,00
KAKI		P16085990C	1.355,00
SAHARA		P16085220C	1.355,00
SENAPE		P160855A0C	1.355,00
TERRA COTTA		P16085090C	1.355,00
TORTORA		P160856A0C	1.355,00

ELEGANCE LINE

COLOUR	COMPATIBILITY	EURO
PENNELLATO	MC 70/51, MP 7 [1], IP 7 [1], IP 7 M [1]	2.040,00
PENNELLATO DECORATO		2.860,00

LINEA LUXURY

COLOUR	COMPATIBILITY	EURO
ORO	MC 70/51, MP 7 [1], IP 7 [1], IP 7 M [1]	4.300,00
PLATINO		4.300,00
RAME		3.205,00
ORO DECORATO		5.115,00
PLATINO DECORATO		5.115,00
RAME DECORATO		4.025,00

The raised element includes slits that allow the hot air from the Multifuoco System® to come through. The vents to be applied to the lining must be ordered separately.
[1] For installation with IP 7, the compensation kit is essential. Compatible with front pellet-loading tray.

OBLIGATORY ACCESSORIES	CODE	EURO
Special SHUTTLE items in steel	P08013220C	2.430,00
Kit for rear, stainless steel SHUTTLE 1 casing for MC70/51- IP7	P08061230C	2.820,00
Wall-mounted SHUTTLE 1 flue cover	P08012910C	870,00
Ceiling-mounted SHUTTLE 1 flue cover	P08012920C	990,00
Compensation kit for IP 7, compatible with front pellet-loading tray	N08010022C	125,00
Compensation kit for IP 7 M - MP 7, compatible with front pellet-loading tray	N08010034C	125,00

ACCESSORIES ON REQUEST

Accessories - Certified pipes and bends for connecting the flue	refer to the end of the section regarding the chosen interior

Prices are considered to be without sales taxes. Gruppo Piazzetta S.p.A. reserves the right to modify and/or delete all printed material, if deemed necessary by Gruppo Piazzetta without any written or prior notice.
Document reserved for the Gruppo Piazzetta S.p.A. sales organisation.

I VENEZIANI

SIGNS

Hand-crafted cladding in Majolica. In the photo, Bianco Calce with decorations enriched with details in crystalline glaze.

WOOD

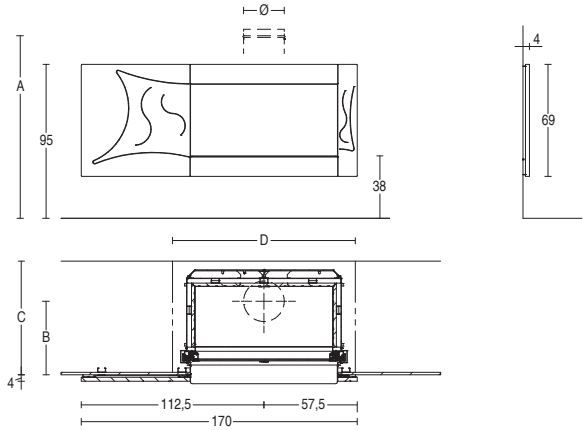

MOD.	A	B	C	D	Ø
MA 263 SL	154	39,5	59	112	25
MA 263 SL PLUS	194	39,5	69	122	25

MOD.	A	B	C	D	Ø
MA 263 B SL PLUS	194	30,3	60,6	122	20
MC 90/44	84	38,5	58	117	20

Ø Size should be checked during installation.

BASIC LINE

COLOUR	COMPATIBILITY	CODE	EURO
ARDESIA	MA 263 SL [1], MA 263 SL PLUS [1], MA 263 B SL PLUS [1], MC 90/44 [1]	P16054240C	1.940,00
BIANCO GRIGIO		P16054410C	1.940,00
BIANCO ANTICO		P16054640C	1.940,00
BIANCO		P16054300C	1.940,00
MATTONE		P160544A0C	1.940,00
KAKI		P16054990C	1.940,00
SAHARA		P16054220C	1.940,00
SENAPE		P160545A0C	1.940,00
TERRA COTTA		P16054090C	1.940,00
TORTORA		P160546A0C	1.940,00

ELEGANCE LINE

COLOUR	COMPATIBILITY	EURO
PENNELLATO	MA 263 SL [1], MA 263 SL PLUS [1], MA 263 B SL PLUS [1], MC 90/44 [1]	2.925,00
PENNELLATO DECORATO		3.730,00

LINEA LUXURY

COLOUR	COMPATIBILITY	EURO
ORO	MA 263 SL [1], MA 263 SL PLUS [1], MA 263 B SL PLUS [1], MC 90/44 [1]	5.400,00
PLATINO		5.400,00
RAME		4.220,00
ORO DECORATO		6.220,00
PLATINO DECORATO		6.220,00
RAME DECORATO		5.035,00

If the Multifuoco System® is installed, you need to include vents in the false walling. The vents must be ordered separately.
[1] The compensation kit is required for installation with MA SL - MC.

OBLIGATORY ACCESSORIES	CODE	EURO
Compensation kit for MA263SL-MC90/44	P08012840C	430,00

ACCESSORIES ON REQUEST

Accessories - Certified pipes and bends for connecting the flue	refer to the end of the section regarding the chosen interior

Prices are considered to be without sales taxes. Gruppo Piazzetta S.p.A. reserves the right to modify and/or delete all printed material, if deemed necessary by Gruppo Piazzetta without any written or prior notice.
Document reserved for the Gruppo Piazzetta S.p.A. sales organisation.

I VENEZIANI

SUN

Cladding in hand-crafted Majolica, blasted Steel profiles. In the photo: Viola Alba enriched with brush stroke detailing in matching crystalline glaze on the side panel.

WOOD

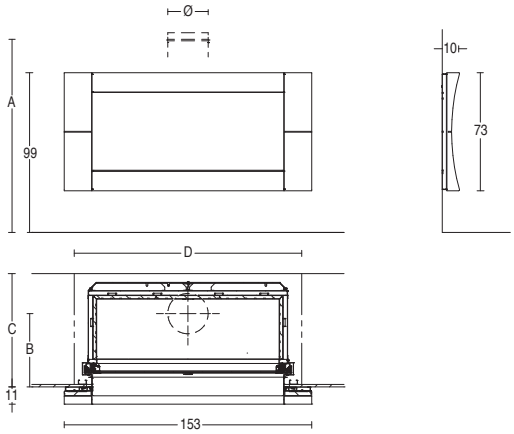

MOD.	A	B	C	D	Ø
MA 264 SL	160	39,5	59	140	25

MOD.	A	B	C	D	Ø
MC 120/48	88	38	58	145	20

Ø Size should be checked during installation.

BASIC LINE

COLOUR	COMPATIBILITY	CODE	EURO
ARDESIA	MA 264 SL [1], MC 120/48 [1]	P16094240C	2.015,00
BIANCO GRIGIO		P16094410C	2.015,00
BIANCO ANTICO		P16094640C	2.015,00
BIANCO		P16094300C	2.015,00
MATTONE		P160944A0C	2.015,00
KAKI		P16094990C	2.015,00
SAHARA		P16094220C	2.015,00
SENAPE		P160945A0C	2.015,00
TERRA COTTA		P16094090C	2.015,00
TORTORA		P160946A0C	2.015,00

ELEGANCE LINE

COLOUR	COMPATIBILITY	EURO
PENNELLATO	MA 264 SL [1], MC 120/48 [1]	3.035,00
PENNELLATO DECORATO		3.860,00
PENNELLATO DAMASCATO		4.680,00

LINEA LUXURY

COLOUR	COMPATIBILITY	EURO
ORO	MA 264 SL [1], MC 120/48 [1]	4.845,00
PLATINO		4.845,00
RAME		3.985,00
ORO DECORATO		5.670,00
PLATINO DECORATO		5.670,00
RAME DECORATO		4.810,00
ORO DAMASCATO		6.485,00
PLATINO DAMASCATO		6.485,00
RAME DAMASCATO		5.620,00

If the Multifuoco System® is installed, you need to include vents in the false walling. The vents must be ordered separately.
[1] The compensation kit is required for installation with MA SL - MC.

ACCESSORIES ON REQUEST	CODE	EURO
Compensation kit for MA264SL-MC120/48	P08013100C	430,00

ACCESSORIES ON REQUEST	
Accessories - Certified pipes and bends for connecting the flue	refer to the end of the section regarding the chosen interior

Prices are considered to be without sales taxes. Gruppo Piazzetta S.p.A. reserves the right to modify and/or delete all printed material, if deemed necessary by Gruppo Piazzetta without any written or prior notice.
Document reserved for the Gruppo Piazzetta S.p.A. sales organisation.

I VENEZIANI

SURFACE

Hand-crafted cladding in large panels of Majolica, blasted Steel profiles. In the photo: Bianco Calce with side decorations enriched with detailing in crystalline glaze.

WOOD

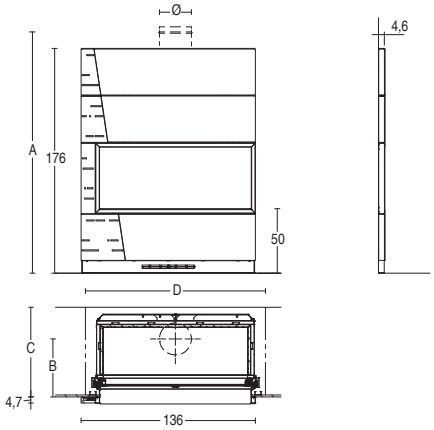

MOD.	A	B	C	D	Ø
MA 264 SL	172	39,5	59	140	25

MOD.	A	B	C	D	Ø
MC 120/48	100	42	62	145	20

Ø Size should be checked during installation.

BASIC LINE

COLOUR	COMPATIBILITY	CODE	EURO
ARDESIA	MA 264 SL [1], MC 120/48 [1]	P16055240C	4.185,00
BIANCO GRIGIO		P16055410C	4.185,00
BIANCO ANTICO		P16055640C	4.185,00
BIANCO		P16055300C	4.185,00
MATTONE		P160554A0C	4.185,00
KAKI		P16055990C	4.185,00
SAHARA		P16055220C	4.185,00
SENAPE		P160555A0C	4.185,00
TERRA COTTA		P16055090C	4.185,00
TORTORA		P160556A0C	4.185,00

ELEGANCE LINE

COLOUR	COMPATIBILITY	EURO
PENNELLATO	MA 264 SL [1], MC 120/48 [1]	6.285,00
PENNELLATO DECORATO		7.090,00

LINEA LUXURY

COLOUR	COMPATIBILITY	EURO
ORO	MA 264 SL [1], MC 120/48 [1]	10.340,00
PLATINO		10.340,00
RAME		8.385,00
ORO DECORATO		11.150,00
PLATINO DECORATO		11.150,00
RAME DECORATO		9.200,00

The raised element includes slits that allow the hot air from the Multifuoco System® to come through. The vents are included in the cladding.
[1] The compensation kit is required for installation with MA SL - MC.

ACCESSORIES ON REQUEST	CODE	EURO
Compensation kit for MA264SL-MC120/48	P08013100C	430,00

ACCESSORIES ON REQUEST	
Accessories - Certified pipes and bends for connecting the flue	refer to the end of the section regarding the chosen interior

Prices are considered to be without sales taxes. Gruppo Piazzetta S.p.A. reserves the right to modify and/or delete all printed material, if deemed necessary by Gruppo Piazzetta without any written or prior notice.
Document reserved for the Gruppo Piazzetta S.p.A. sales organisation.

I VENEZIANI

VIENNA

Hand-crafted Majolica cladding with bas-relief decorations.

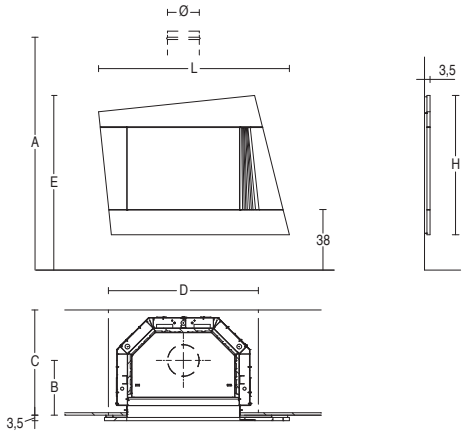

MOD.	A	B	C	D	E	L	H	Ø
MA 260 SL	156,5	42	64	90	109,5	120	87,5	20
MA 260 SL PLUS	196,5	42	74	100	109,5	120	87,5	20
MA 260 B SL	155	32,8	65,6	91,5	109,5	120	87,5	20

MOD.	A	B	C	D	E	L	H	Ø
MC 65/60	100	38	58	92	118	115,5	96	18
MC 65/60 P	146	38	58	92	118	115,5	96	18

MOD.	A	B	C	D	E	L	H	Ø
MC 70/51	91	38	58	96	109,5	120	87,5	18
MC 70/51 SL	91	42	62	96	109,5	120	87,5	18
MC 65/60 SL	100	42	62	92	118	115,5	96	18

Ø Size should be checked during installation.

COLOUR	COMPATIBILITY	CODE	EURO
BIANCO ANTICO	MA 260 SL, MA 260 SL PLUS, MA 260 B SL, MC 70/51, MC 70/51 SL	P16029640C	1.215,00
	MC 65/60, MC 65/60 P, MC 65/60 SL	P16030640C	1.215,00
GRIGIO CERATO	MA 260 SL, MA 260 SL PLUS, MA 260 B SL, MC 70/51, MC 70/51 SL	P16029310C	1.215,00
	MC 65/60, MC 65/60 P, MC 65/60 SL	P16030310C	1.215,00

If the Multifuoco System® is installed, you need to include vents in the false walling. The vents must be ordered separately.

ACCESSORIES ON REQUEST	
Accessories - Certified pipes and bends for connecting the flue	refer to the end of the section regarding the chosen interior

Prices are considered to be without sales taxes. Gruppo Piazzetta S.p.A. reserves the right to modify and/or delete all printed material, if deemed necessary by Gruppo Piazzetta without any written or prior notice.
Document reserved for the Gruppo Piazzetta S.p.A. sales organisation.

I VENEZIANI

VIENNA

Hand-crafted Majolica cladding with bas-relief decorations.

PELLET THERMO

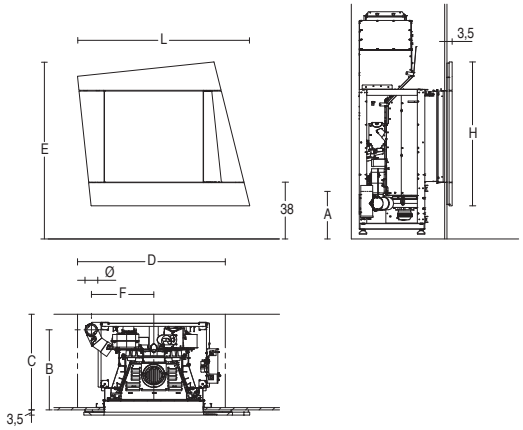

MOD.	A	B	C	D	E	F	L	H	Ø
IP 7	80,5	54	44	82	109	27,5	120	87,5	8
IP 7 M	80,5	54	44	82	109	27,5	120	87,5	8

MOD.	A	B	C	D	E	F	L	H	Ø
MP 7	80,5	54	44	82	109	27,5	120	87,5	8

MOD.	A	B	C	D	E	F	L	H	Ø
MP 973 TH	33	55	72	105	118	38	115,5	96	10

Ø Size should be checked during installation.

COLOUR	COMPATIBILITY	CODE	EURO
BIANCO ANTICO	MP 7 [1], IP 7 [1], IP 7 M [1]	P16029640C	1.215,00
	MP 973 TH, MP 973 TH ACS	P16030640C	1.215,00
GRIGIO CERATO	MP 7 [1], IP 7 [1], IP 7 M [1]	P16029310C	1.215,00
	MP 973 TH, MP 973 TH ACS	P16030310C	1.215,00

If the Multifuoco System® is installed, you need to include vents in the false walling. The vents must be ordered separately.
[1] For installation with IP 7 - IP 7 M - MP 7, the compensation kit is essential.

OBLIGATORY ACCESSORIES	CODE	EURO
Compensation kit for IP 7, NOT compatible with front pellet-loading tray	N08010021C	100,00
Compensation kit for IP 7 M - MP 7, NOT compatible with front pellet-loading tray	N08010033C	100,00

ACCESSORIES ON REQUEST	
Accessories - Certified pipes and bends for connecting the flue	refer to the end of the section regarding the chosen interior

Prices are considered to be without sales taxes. Gruppo Piazzetta S.p.A. reserves the right to modify and/or delete all printed material, if deemed necessary by Gruppo Piazzetta without any written or prior notice.
Document reserved for the Gruppo Piazzetta S.p.A. sales organisation.

I VENEZIANI

VILLAGE

Cladding in hand-crafted Majolica, blasted Steel profiles. In the photo, Rame Decorato enriched with detailing with matching crystalline glaze on the top panel.

WOOD

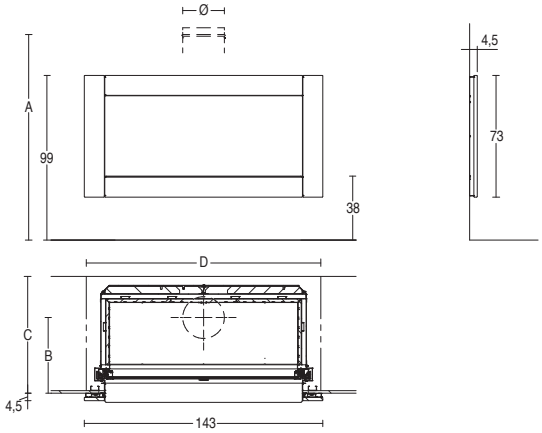

MOD.	A	B	C	D	Ø
MA 264 SL	160	39,5	59	140,5	25
MC 120/48	88	38	58	143	20

MOD.	A	B	C	D	Ø
MC 120/48 SL	88	42	62	143	20

Ø Size should be checked during installation.

BASIC LINE

COLOUR	COMPATIBILITY	CODE	EURO
ARDESIA	MA 264 SL [1], MC 120/48 [1], MC 120/48 SL [1]	P16096240C	1.915,00
BIANCO GRIGIO		P16096410C	1.915,00
BIANCO ANTICO		P16096640C	1.915,00
BIANCO		P16096300C	1.915,00
MATTONE		P160964A0C	1.915,00
KAKI		P16096990C	1.915,00
SAHARA		P16096220C	1.915,00
SENAPE		P160965A0C	1.915,00
TERRA COTTA		P16096090C	1.915,00
TORTORA		P160966A0C	1.915,00

ELEGANCE LINE

COLOUR	COMPATIBILITY	EURO
PENNELLATO	MA 264 SL [1], MC 120/48 [1], MC 120/48 SL [1]	2.860,00
PENNELLATO DECORATO		4.220,00
PENNELLATO DAMASCATO		4.625,00

LINEA LUXURY

COLOUR	COMPATIBILITY	EURO
ORO	MA 264 SL [1], MC 120/48 [1], MC 120/48 SL [1]	4.810,00
PLATINO		4.810,00
RAME		3.870,00
ORO DECORATO		6.150,00
PLATINO DECORATO		6.150,00
RAME DECORATO		5.235,00
ORO DAMASCATO		6.565,00
PLATINO DAMASCATO		6.565,00
RAME DAMASCATO		5.635,00

If the Multifuoco System® is installed, you need to include vents in the false walling. The vents must be ordered separately.
[1] The compensation kit is required for installation with MA SL - MC - MC SL.

ACCESSORIES ON REQUEST	CODE	EURO
Compensation kit for MA264SL-MC120/48-MC120/48SL	P08013100C	430,00

ACCESSORIES ON REQUEST	
Accessories - Certified pipes and bends for connecting the flue	refer to the end of the section regarding the chosen interior

Prices are considered to be without sales taxes. Gruppo Piazzetta S.p.A. reserves the right to modify and/or delete all printed material, if deemed necessary by Gruppo Piazzetta without any written or prior notice.
Document reserved for the Gruppo Piazzetta S.p.A. sales organisation.

I VENEZIANI

VISION

Hand-crafted Majolica cladding with front piece and profiles in blasted Steel.

WOOD PELLET

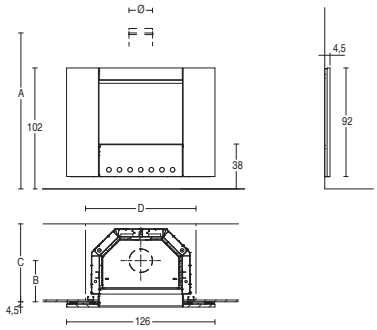

MOD.	A	B	C	D	Ø
MA 260 SL	156,5	42	64	90	20
MA 260 SL PLUS	196,5	42	74	100	20
MA 260 B SL	153	32,8	65,6	91,5	20

MOD.	A	B	C	D	Ø
MC 70/51	91	38	58	94	18
MC 70/51 SL	91	42	62	94	18
IP 7	80,5	44	54	78	8

MOD.	A	B	C	D	Ø
IP 7 M	80,5	44	54	78	8
MP 7	80,5	44	54	78	8

Ø Size should be checked during installation.

COLOUR	COMPATIBILITY	CODE	EURO
GRIGIO FERRO	MA 260 SL, MA 260 SL PLUS, MA 260 B SL, MC 70/51, MC 70/51 SL, MP 7 [1] IP 7 [1], IP 7 M [1]	P16099910C	1.695,00
MOKA		P16099890C	1.805,00
NEVE		P16099650C	1.695,00

If the Multifuoco System® is installed, you need to include vents in the false walling.
[1] For installation with IP 7 - IP 7 M - MP 7, the compensation kit is essential.

OBLIGATORY ACCESSORIES	CODE	EURO
Compensation kit for IP 7, NOT compatible with front pellet-loading tray	N08010021C	100,00
Compensation kit for IP 7 M - MP 7, NOT compatible with front pellet-loading tray	N08010033C	100,00

ACCESSORIES ON REQUEST	
Accessories - Certified pipes and bends for connecting the flue	refer to the end of the section regarding the chosen interior

Prices are considered to be without sales taxes. Gruppo Piazzetta S.p.A. reserves the right to modify and/or delete all printed material, if deemed necessary by Gruppo Piazzetta without any written or prior notice.
Document reserved for the Gruppo Piazzetta S.p.A. sales organisation.

I VENEZIANI

VOYAGER

Cladding in hand-crafted Majolica. In the photo, Verde Pennellato, with decoration in matching crystalline glaze on the side panel.

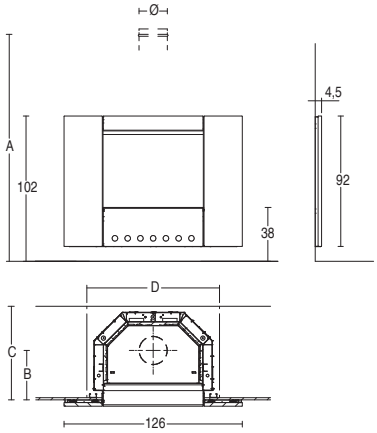

MOD.	A	B	C	D	Ø
MA 260 SL	156,5	42	64	90	20
MA 260 SL PLUS	196,5	42	74	100	20
MA 260 B SL	153	32,8	65,6	91,5	20

MOD.	A	B	C	D	Ø
MC 70/51	91	38	58	94	18
MC 70/51 SL	91	42	62	94	18
IP 7	80,5	44	54	78	8

MOD.	A	B	C	D	Ø
IP 7 M	80,5	44	54	78	8
MP 7	80,5	44	54	78	8

Ø Size should be checked during installation.

BASIC LINE

COLOUR	COMPATIBILITY	CODE	EURO
ARDESIA	MA 260 SL, MA 260 SL PLUS, MA 260 B SL MC 70/51, MC 70/51 SL, MP 7 [1], IP 7 [1], IP 7 M [1]	P16067240C	2.215,00
BIANCO GRIGIO		P16067410C	2.215,00
BIANCO ANTICO		P16067640C	2.215,00
BIANCO		P16067300C	2.215,00
MATTONE		P160674A0C	2.215,00
KAKI		P16067990C	2.215,00
SAHARA		P16067220C	2.215,00
SENAPE		P160675A0C	2.215,00
TERRA COTTA		P16067090C	2.215,00
TORTORA		P160676A0C	2.215,00

ELEGANCE LINE

COLOUR	COMPATIBILITY	EURO
PENNELLATO	MA 260 SL, MA 260 SL PLUS, MA 260 B SL MC 70/51, MC 70/51 SL, MP 7 [1], IP 7 [1], IP 7 M [1]	3.310,00
PENNELLATO DECORATO		4.140,00
PENNELLATO DAMASCATO		4.950,00

LINEA LUXURY

COLOUR	COMPATIBILITY	EURO
ORO	MA 260 SL, MA 260 SL PLUS, MA 260 B SL MC 70/51, MC 70/51 SL, MP 7 [1], IP 7 [1], IP 7 M [1]	5.115,00
PLATINO		5.115,00
RAME		4.255,00
ORO DECORATO		5.935,00
PLATINO DECORATO		5.935,00
RAME DECORATO		5.075,00
ORO DAMASCATO		6.760,00
PLATINO DAMASCATO		6.760,00
RAME DAMASCATO		5.905,00

If the Multifuoco System® is installed, you need to include vents in the false walling. The vents must be ordered separately.
[1] For installation with IP 7 - IP 7 M - MP 7, the compensation kit is essential.

OBLIGATORY ACCESSORIES	CODE	EURO
Compensation kit for IP 7, NOT compatible with front pellet-loading tray	N08010021C	100,00
Compensation kit for IP 7 M - MP 7, NOT compatible with front pellet-loading tray	N08010033C	100,00

ACCESSORIES ON REQUEST	
Accessories - Certified pipes and bends for connecting the flue	refer to the end of the section regarding the chosen interior

Prices are considered to be without sales taxes. Gruppo Piazzetta S.p.A. reserves the right to modify and/or delete all printed material, if deemed necessary by Gruppo Piazzetta without any written or prior notice.
Document reserved for the Gruppo Piazzetta S.p.A. sales organisation.

I VENEZIANI

WAYS

Hand-crafted clay cladding. The decorations, also in clay, are the result of expert craftsmanship. Every frame is a unique and unrepeatable item.

WOOD PELLET

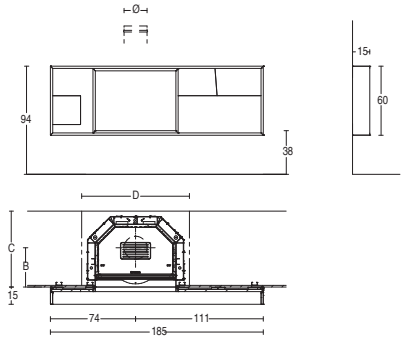

MOD.	A	B	C	D	Ø
MA 260 SL	156,5	42	64	90	20
MA 260 SL PLUS	196,5	42	74	100	20
MA 260 B SL	155	32,8	65,6	91,5	20

MOD.	A	B	C	D	Ø
MC 70/51	91	38	58	96	18
MC 70/51 SL	91	42	62	96	18
IP 7	84,5	44	54	78	8

MOD.	A	B	C	D	Ø
IP 7 M	84,5	44	54	78	8
MP 7	84,5	44	54	78	8

Ø Size should be checked during installation.

COLOUR	COMPATIBILITY	CODE	EURO
LE TERRE	MA 260 SL [2], MA 260 SL PLUS [2], MA 260 B SL [2] MC 70/51 [2], MC 70/51 SL [2], MP 7 [1], IP 7 [1], IP 7 M [1]	P17056000C	5.990,00

If the Multifuoco System® is installed, you need to include vents in the false walling. The vents must be ordered separately.
[1] For installation with IP 7 - IP 7 M - MP 7, the compensation kit is essential.
[2] The compensation kit is required for installation with MA SL - MA SL PLUS - MC - MC SL.

OBLIGATORY ACCESSORIES	CODE	EURO
Compensation kit for MA260SL-MA260BSL-MC70/51-MC70/51SL	P08013730C	430,00
Compensation kit for IP 7, NOT compatible with front pellet-loading tray	N08010021C	100,00
Compensation kit for IP 7 M - MP 7, NOT compatible with front pellet-loading tray	N08010033C	100,00

ACCESSORIES ON REQUEST	
Accessories - Certified pipes and bends for connecting the flue	refer to the end of the section regarding the chosen interior

Prices are considered to be without sales taxes. Gruppo Piazzetta S.p.A. reserves the right to modify and/or delete all printed material, if deemed necessary by Gruppo Piazzetta without any written or prior notice.
Document reserved for the Gruppo Piazzetta S.p.A. sales organisation.

I VENEZIANI

WITH YOU

Cladding in hand-crafted Majolica. In the photo: Orange Pennellato, with decorations in crystalline glaze. External frame in black-painted steel.

WOOD PELLET

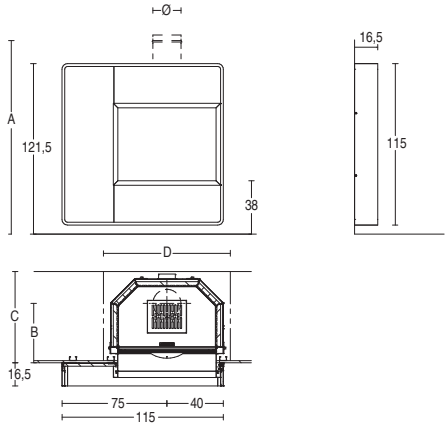

MOD.	A	B	C	D	Ø
MA 260 SL	157	42,5	64,5	90	20
MA 260 SL PLUS	197	42,5	74,5	100	20
MA 260 B SL	157	42,5	85	90	20

MOD.	A	B	C	D	Ø
MC 70/51	91	38,5	58,5	95	18
MC 70/51 SL	91	42,5	62,5	95	18
IP 7	80,5	44	54	82	8

MOD.	A	B	C	D	Ø
IP 7 M	80,5	44	54	82	8
MP 7	80,5	44	54	82	8

Ø Size should be checked during installation.

BASIC LINE

COLOUR	COMPATIBILITY	CODE	EURO
ARDESIA	MA 260 SL [2], MA 260 SL PLUS [2], MA 260 B SL [2] MC 70/51 [2], MC 70/51 SL [2], MP 7 [1], IP 7 [1], IP 7 M [1]	P16047240C	1.085,00
BIANCO GRIGIO		P16047410C	1.085,00
BIANCO ANTICO		P16047640C	1.085,00
BIANCO		P16047300C	1.085,00
MATTONE		P160474A0C	1.085,00
KAKI		P16047990C	1.085,00
SAHARA		P16047220C	1.085,00
SENAPE		P160475A0C	1.085,00
TERRA COTTA		P16047090C	1.085,00
TORTORA		P160476A0C	1.085,00

ELEGANCE LINE

COLOUR	COMPATIBILITY	EURO
PENNELLATO	MA 260 SL [2], MA 260 SL PLUS [2], MA 260 B SL [2] MC 70/51 [2], MC 70/51 SL [2], MP 7 [1], IP 7 [1], IP 7 M [1]	1.620,00
PENNELLATO DECORATO		2.440,00
PENNELLATO DAMASCATO		3.255,00

LINEA LUXURY

COLOUR	COMPATIBILITY	EURO
ORO	MA 260 SL [2], MA 260 SL PLUS [2], MA 260 B SL [2] MC 70/51 [2], MC 70/51 SL [2], MP 7 [1], IP 7 [1], IP 7 M [1]	3.870,00
PLATINO		3.870,00
RAME		2.800,00
ORO DECORATO		4.700,00
PLATINO DECORATO		4.700,00
RAME DECORATO		3.615,00
ORO DAMASCATO		5.515,00
PLATINO DAMASCATO		5.515,00
RAME DAMASCATO		4.425,00

If the Multifuoco System® is installed, you need to include vents in the false walling. The vents must be ordered separately.
[1] For installation with IP 7 - IP 7 M - MP 7, the compensation kit is essential.
[2] The compensation kit is required for installation with MA SL - MA SL PLUS - MC - MC SL.

OBLIGATORY ACCESSORIES	CODE	EURO
Kit of special WITH YOU painted items.	P08013350C	2.775,00
Compensation kit for MA260SL-MA260BSL-MC70/51-MC70/51SL	P08013870C	200,00
Compensation kit for IP 7, NOT compatible with front pellet-loading tray	N08010021C	100,00
Compensation kit for IP 7 M - MP 7, NOT compatible with front pellet-loading tray	N08010033C	100,00

ACCESSORIES ON REQUEST	
Accessories - Certified pipes and bends for connecting the flue	refer to the end of the section regarding the chosen interior

Prices are considered to be without sales taxes. Gruppo Piazzetta S.p.A. reserves the right to modify and/or delete all printed material, if deemed necessary by Gruppo Piazzetta without any written or prior notice.
Document reserved for the Gruppo Piazzetta S.p.A. sales organisation.

I VENEZIANI

ZEUS

Hand-crafted cladding in Majolica, blasted Steel profiles. In the photo: Oro Decorato finish, enriched with decorations in Oro leaf.

WOOD

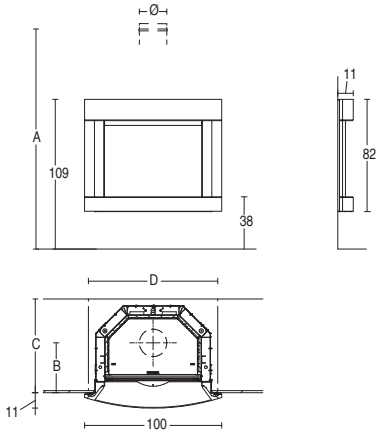

MOD.	A	B	C	D	Ø
MA 260 SL	156,5	44	66	90	20
MA 260 SL PLUS	196,5	44	76	100	20
MA 260 B SL	153	34,8	69,6	91,5	20

MOD.	A	B	C	D	Ø
MC 70/51	91	40	60	94	18
MC 70/51 SL	91	44	64	94	18

Ø Size should be checked during installation.

BASIC LINE

COLOUR	COMPATIBILITY	CODE	EURO
ARDESIA	MA 260 SL, MA 260 SL PLUS, MA 260 B SL, MC 70/51, MC 70/51 SL	P16068240C	2.095,00
BIANCO GRIGIO		P16068410C	2.095,00
BIANCO ANTICO		P16068640C	2.095,00
BIANCO		P16068300C	2.095,00
MATTONE		P160684A0C	2.095,00
KAKI		P16068990C	2.095,00
SAHARA		P16068220C	2.095,00
SENAPE		P160685A0C	2.095,00
TERRA COTTA		P16068090C	2.095,00
TORTORA		P160686A0C	2.095,00

ELEGANCE LINE

COLOUR	COMPATIBILITY	EURO
PENNELLATO	MA 260 SL, MA 260 SL PLUS, MA 260 B SL, MC 70/51, MC 70/51 SL	3.155,00
PENNELLATO DECORATO		3.965,00
PENNELLATO DAMASCATO		4.790,00

LINEA LUXURY

COLOUR	COMPATIBILITY	EURO
ORO	MA 260 SL, MA 260 SL PLUS, MA 260 B SL, MC 70/51, MC 70/51 SL	4.950,00
PLATINO		4.950,00
RAME		4.080,00
ORO DECORATO		5.770,00
PLATINO DECORATO		5.770,00
RAME DECORATO		4.905,00
ORO DAMASCATO		6.600,00
PLATINO DAMASCATO		6.600,00
RAME DAMASCATO		5.715,00

If the Multifuoco System® is installed, you need to include vents in the false walling. The vents must be ordered separately.

ACCESSORIES ON REQUEST

Accessories - Certified pipes and bends for connecting the flue	refer to the end of the section regarding the chosen interior

Prices are considered to be without sales taxes. Gruppo Piazzetta S.p.A. reserves the right to modify and/or delete all printed material, if deemed necessary by Gruppo Piazzetta without any written or prior notice.
Document reserved for the Gruppo Piazzetta S.p.A. sales organisation.

STOVE-FIREPLACES

STOVE-FIREPLACES

BERNA

Majolica cladding. Steel firebox. Heating: Ductable hot air / Natural convection.

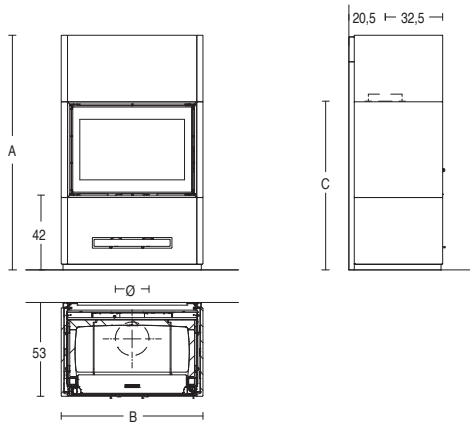

MODEL	TYPE	ENERGY EFFICIENCY CLASS	NOMINAL HEAT OUTPUT (KW)	NOMINAL THERMAL EFFICIENCY (%)	NOMINAL CONSUMPTION (KG/H)	WEIGHT (KG)	A (CM)	B (CM)	C (CM)	Ø (CM)
BERNA MC 65/60	MC 65/60	A	11,0	80	3.1	264	141,6	75	104	18
BERNA MC 70/51	MC 70/51	A	11,0	79	2,9	246	132,6	80	95	18
BERNA MC 90/44	MC 90/44	A	12,0	79.3	3,2	262	125,6	100	88	20
BERNA MC 120/48	MC 120/48	A	14,0	78,9	3,8	332	129,6	128	92	20
BERNA MC 80/64 BL	MC 65/60	A	11,0	80	3,1	321	145	89,6	104	18
BERNA MC 85/55 BL	MC 70/51	A	11,0	79	2,9	310	136	94,6	95	18
BERNA MC 105/48 BL	MC 90/44	A	12,0	79,0	3,2	305	129	114,6	88	20
BERNA MC 133/52 BL	MC 120/48	A	14,0	79,0	3,8	426	133	142,6	92	20

Ø Size should be checked during installation.

COLOUR	CODE CLADDING	PRICE CLADDING	FIREBOX	CODE FIREBOX	PRICE FIREBOX	PRICE TOTAL PRICE
BIANCO	P06180300C	2.890,00	MC 65/60 *	P04806010C	2.410,00	**5.300,00**
NERO OPACO	P06180160C					
ROSSO LAVA	P06180450C					
TERRA COTTA	P06180090C					
BIANCO	P06181300C	2.890,00	MC 70/51 *	P04805110C	2.475,00	**5.365,00**
NERO OPACO	P06181160C					
ROSSO LAVA	P06181450C					
TERRA COTTA	P06181090C					
BIANCO	P06182300C	2.960,00	MC 90/44 *	P04804410C	2.720,00	**5.680,00**
NERO OPACO	P06182160C					
ROSSO LAVA	P06182450C					
TERRA COTTA	P06182090C					
BIANCO	P06183300C	3.070,00	MC 120/48 *	P04804810C	3.285,00	**6.355,00**
NERO OPACO	P06183160C					
ROSSO LAVA	P06183450C					
TERRA COTTA	P06183090C					
BIANCO	P06184300C	2.960,00	MC 80/64 BL	P04826400C	3.495,00	**6.455,00**
NERO OPACO	P06184160C					
ROSSO LAVA	P06184450C					
TERRA COTTA	P06184090C					
BIANCO	P06185300C	2.965,00	MC 85/55 BL	P04825500C	3.515,00	**6.480,00**
NERO OPACO	P06185160C					
ROSSO LAVA	P06185450C					
TERRA COTTA	P06185090C					
BIANCO	P06186300C	3.040,00	MC 105/48 BL	P04824800C	3.850,00	**6.890,00**
NERO OPACO	P06186160C					
ROSSO LAVA	P06186450C					
TERRA COTTA	P06186090C					
BIANCO	P06187300C	3.150,00	MC 133/52 BL	P04825200C	4.670,00	**7.820,00**
NERO OPACO	P06187160C					
ROSSO LAVA	P06187450C					
TERRA COTTA	P06187090C					

* Specific firebox for Berna, Davos and Lugano claddings, not compatible with the Veneziani surrounds.

ACCESSORIES ON REQUEST	
Accessories - Certified pipes and bends for connecting the flue	refer to the end of the section regarding the chosen interior

Prices are considered to be without sales taxes. Gruppo Piazzetta S.p.A. reserves the right to modify and/or delete all printed material, if deemed necessary by Gruppo Piazzetta without any written or prior notice.
Document reserved for the Gruppo Piazzetta S.p.A. sales organisation.

STOVE-FIREPLACES

DAVOS

Majolica cladding. Steel firebox. Heating: Ductable hot air / Natural convection.

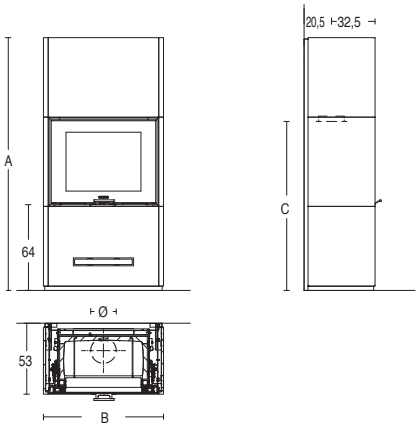

MODEL	TYPE	ENERGY EFFICIENCY CLASS	NOMINAL HEAT OUTPUT (KW)	NOMINAL THERMAL EFFICIENCY (%)	NOMINAL CONSUMPTION (KG/H)	WEIGHT (KG)	A (CM)	B (CM)	C (CM)	Ø (CM)
DAVOS MC 65/60	MC 65/60	A	11,0	80	3.1	291	185,5	75	126	18
DAVOS MC 70/51	MC 70/51	A	11,0	79	2,9	270	176,5	80	117	18
DAVOS MC 90/44	MC 90/44	A	12,0	79.3	3,2	284	169,5	100	110	20
DAVOS MC 120/48	MC 120/48	A	14,0	78,9	3,8	327	173,5	128	114	20
DAVOS MC 80/64 BL	MC 65/60	A	11,0	80	3,1	352	189	89,6	126	18
DAVOS MC 85/55 BL	MC 70/51	A	11,0	79	2,9	338	180	94,6	117	18
DAVOS MC 105/48 BL	MC 90/44	A	12,0	79,0	3,2	351	173	114,6	110	20
DAVOS MC 133/52 BL	MC 120/48	A	14,0	79,0	3,8	514	177	142,6	114	20

Ø Size should be checked during installation.

COLOUR	CODE CLADDING	PRICE CLADDING	FIREBOX	CODE FIREBOX	PRICE FIREBOX	PRICE TOTAL PRICE
BIANCO	P06170300C	3.055,00	MC 65/60 *	P04806010C	2.410,00	**5.465,00**
NERO OPACO	P06170160C					
ROSSO LAVA	P06170450C					
TERRA COTTA	P06170090C					
BIANCO	P06171300C	3.055,00	MC 70/51 *	P04805110C	2.475,00	**5.530,00**
NERO OPACO	P06171160C					
ROSSO LAVA	P06171450C					
TERRA COTTA	P06171090C					
BIANCO	P06172300C	3.115,00	MC 90/44 *	P04804410C	2.720,00	**5.835,00**
NERO OPACO	P06172160C					
ROSSO LAVA	P06172450C					
TERRA COTTA	P06172090C					
BIANCO	P06173300C	3.235,00	MC 120/48 *	P04804810C	3.285,00	**6.520,00**
NERO OPACO	P06173160C					
ROSSO LAVA	P06173450C					
TERRA COTTA	P06173090C					
BIANCO	P06174300C	3.115,00	MC 80/64 BL	P04826400C	3.495,00	**6.610,00**
NERO OPACO	P06174160C					
ROSSO LAVA	P06174450C					
TERRA COTTA	P06174090C					
BIANCO	P06175300C	3.130,00	MC 85/55 BL	P04825500C	3.515,00	**6.645,00**
NERO OPACO	P06175160C					
ROSSO LAVA	P06175450C					
TERRA COTTA	P06175090C					
BIANCO	P06176300C	3.185,00	MC 105/48 BL	P04824800C	3.850,00	**7.035,00**
NERO OPACO	P06176160C					
ROSSO LAVA	P06176450C					
TERRA COTTA	P06176090C					
BIANCO	P06177300C	3.295,00	MC 133/52 BL	P04825200C	4.670,00	**7.965,00**
NERO OPACO	P06177160C					
ROSSO LAVA	P06177450C					
TERRA COTTA	P06177090C					

* Specific firebox for Berna, Davos and Lugano claddings, not compatible with the Veneziani surrounds.

ACCESSORIES ON REQUEST	
Accessories - Certified pipes and bends for connecting the flue	refer to the end of the section regarding the chosen interior

Prices are considered to be without sales taxes. Gruppo Piazzetta S.p.A. reserves the right to modify and/or delete all printed material, if deemed necessary by Gruppo Piazzetta without any written or prior notice.
Document reserved for the Gruppo Piazzetta S.p.A. sales organisation.

STOVE-FIREPLACES

LUGANO

Majolica cladding. Steel firebox. Heating: Ductable hot air / Natural convection.

WOOD

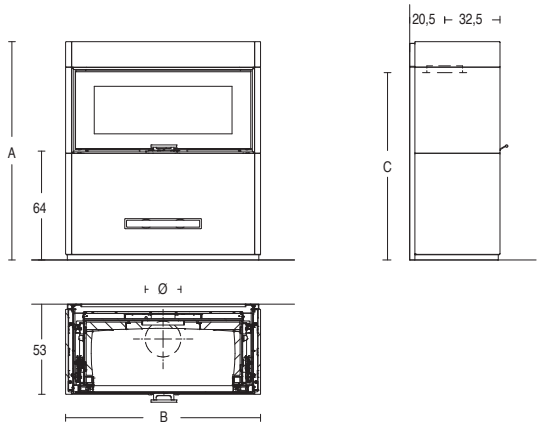

MODEL	TYPE	ENERGY EFFICIENCY CLASS	NOMINAL HEAT OUTPUT (KW)	NOMINAL THERMAL EFFICIENCY (%)	NOMINAL CONSUMPTION (KG/H)	WEIGHT (KG)	A (CM)	B (CM)	C (CM)	Ø (CM)
LUGANO MC 65/60	MC 65/60	A	11,0	80	3.1	263	141	75	126	18
LUGANO MC 70/51	MC 70/51	A	11,0	79	2,9	245	132	80	117	18
LUGANO MC 90/44	MC 90/44	A	12,0	79.3	3,2	260	125	100	110	20
LUGANO MC 120/48	MC 120/48	A	14,0	78,9	3,8	331	129	128	114	20
LUGANO MC 80/64 BL	MC 65/60	A	11,0	80	3,1	320	144	89,6	126	18
LUGANO MC 85/55 BL	MC 70/51	A	11,0	79	2,9	308	135	94,6	117	18
LUGANO MC 105/48 BL	MC 90/44	A	12,0	79,0	3,2	304	128	114,6	110	20
LUGANO MC 133/52 BL	MC 120/48	A	14,0	79,0	3,8	420	132	142,6	114	20

Ø Size should be checked during installation.

COLOUR	CODE CLADDING	PRICE CLADDING	FIREBOX	CODE FIREBOX	PRICE FIREBOX	PRICE TOTAL PRICE
BIANCO	P06190300C	2.820,00	MC 65/60 *	P04806010C	2.410,00	**5.230,00**
NERO OPACO	P06190160C					
ROSSO LAVA	P06190450C					
TERRA COTTA	P06190090C					
BIANCO	P06191300C	2.820,00	MC 70/51 *	P04805110C	2.475,00	**5.295,00**
NERO OPACO	P06191160C					
ROSSO LAVA	P06191450C					
TERRA COTTA	P06191090C					
BIANCO	P06192300C	2.880,00	MC 90/44 *	P04804410C	2.720,00	**5.600,00**
NERO OPACO	P06192160C					
ROSSO LAVA	P06192450C					
TERRA COTTA	P06192090C					
BIANCO	P06193300C	3.000,00	MC 120/48 *	P04804810C	3.285,00	**6.285,00**
NERO OPACO	P06193160C					
ROSSO LAVA	P06193450C					
TERRA COTTA	P06193090C					
BIANCO	P06194300C	2.885,00	MC 80/64 BL	P04826400C	3.495,00	**6.380,00**
NERO OPACO	P06194160C					
ROSSO LAVA	P06194450C					
TERRA COTTA	P06194090C					
BIANCO	P06195300C	2.890,00	MC 85/55 BL	P04825500C	3.515,00	**6.405,00**
NERO OPACO	P06195160C					
ROSSO LAVA	P06195450C					
TERRA COTTA	P06195090C					
BIANCO	P06196300C	2.960,00	MC 105/48 BL	P04824800C	3.850,00	**6.810,00**
NERO OPACO	P06196160C					
ROSSO LAVA	P06196450C					
TERRA COTTA	P06196090C					
BIANCO	P06197300C	3.070,00	MC 133/52 BL	P04825200C	4.670,00	**7.740,00**
NERO OPACO	P06197160C					
ROSSO LAVA	P06197450C					
TERRA COTTA	P06197090C					

* Specific firebox for Berna, Davos and Lugano claddings, not compatible with the Veneziani surrounds.

ACCESSORIES ON REQUEST	
Accessories - Certified pipes and bends for connecting the flue	refer to the end of the section regarding the chosen interior

Prices are considered to be without sales taxes. Gruppo Piazzetta S.p.A. reserves the right to modify and/or delete all printed material, if deemed necessary by Gruppo Piazzetta without any written or prior notice.
Document reserved for the Gruppo Piazzetta S.p.A. sales organisation.

STOVE-FIREPLACES

BERNA

Majolica cladding. Steel firebox. Heating: Ductable hot air.

PELLET

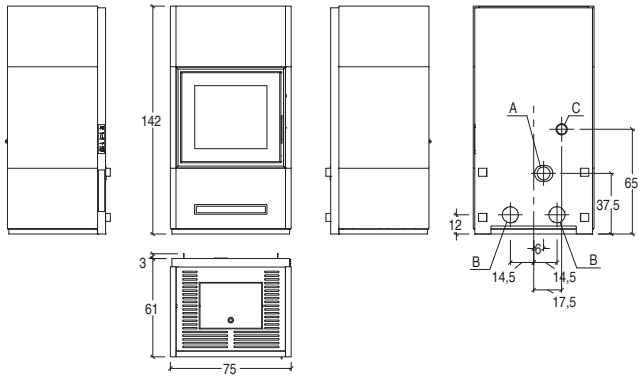

A	B	C
8 cm	7,5 cm	6 cm

FIREBOX	MODEL	TYPE	ENERGY EFFICIENCY CLASS	NOMINAL HEAT OUTPUT (MIN-MAX)	NOMINAL THERMAL EFFICIENCY (MIN-MAX)	NOMINAL CONSUMPTION (MIN-MAX)	WEIGHT
P07974300C	BERNA	SP480-02	A+	4,1-14,0 kW	> 90 - > 90	1,0-3,3 kg/h	284 kg

COLOUR	CODE CLADDING	PRICE CLADDING	FIREBOX	CODE FIREBOX	PRICE FIREBOX	PRICE TOTAL PRICE
BIANCO	P06252300C		BERNA	P07974300C		
NERO OPACO	P06252160C					
ROSSO LAVA	P06252450C					
TERRA COTTA	P06252090C					

ACCESSORIES ON REQUEST

ITEM	CODE	EURO
Wi-Fi module for control through Piazzetta app inclusive of serial cable and power supply	N08013022C	350,00
Combustion air kit	N08010009C	65,00
Flex pipe ø 6 cm for outside air (cost x linear meter)	N08011017C	19,00
Ash vacuum cleaner	N08019040C	100,00
Accessories - Certified pipes and bends for connecting the flue	refer to the end of the section regarding the chosen interior	

Prices are considered to be without sales taxes. Gruppo Piazzetta S.p.A. reserves the right to modify and/or delete all printed material, if deemed necessary by Gruppo Piazzetta without any written or prior notice.
Document reserved for the Gruppo Piazzetta S.p.A. sales organisation.

Piazzetta informs

Majolica

CHARACTERISTICS: in order to appreciate the characteristic, it is necessary to be informed on this prestigious material

1) Aesthetic functionality: the inner steel or cast iron burner is surrounded by majolica shapes and colours.
2) As a source of heating: majolica, given its natural semi-refractory characteristics, it resists to heat by accumulating i and diffusing it into the ambient air.

It is easy to understand that the larger the majolica piece the more heat it can radiate. Therefore the few and large size of the majolica pieces are to be appreciated for the fact that they distribute heat into the room and over time.

The fabrication of large pieces of majolica necessitates a know-how only achieved through a long experience over year in the field. Just stop to think each it takes 12 to 15 days to make a single piece of majolica, with the manual expertise of a dozen or so qualified ceramic masters. Thus due to the long process and manual craftsmanship put into each piece of majolica made by Piazzetta is considered to be unique piece of art work and no two exactly alike.

Important to note that the finishes (the liquid suspension of minerals, finely ground, applied onto the biscuit, which bake to fusion temperature, create a either glossy or dull finish) which chromatically enhance and beautify the "biscuit" (a name given to clay after its first baking process), are all part of controlled chemical reactions which inevitably leave way to phenomena like crazing, speckles and shading... which are not to be considered defects on the majolica but add characteristics of peculiarity to the final piece.

CRAZING: manifests itself on the enameled surface or in crystallization in an intricate form of cracking more or less visible to the naked eye. This is due to the different dilatation coefficient between enamel and the particular sem refractory principals of the biscuit (not to be confused with other materials like porcelain, stoneware, vitreous, fire clay etc...). The crazing distinguishes and characterizes this type of majolica for its specific usage: to cover a piece of materia that radiates heat throughout.

PITTING: is present on the surface of the enamel or the crystalline in the form of pinholes. It is caused by gas bubbles in the enamel itself or in the biscuit, that emerge on the surface through the vitreous mass during softening.

SHADING: typical of red enamels, it shows as clouds of tiny black dots caused by the chemical reaction of iron oxide present variable in the pigment itself. They are formed during the cooling phase after firing.

Despite the complexity of the multiple and variable results given by this particular, hand made and hand painted product, Gruppo Piazzetta ensures the utmost care in the manufacture and quality control of all its majolica production which true connoisseurs do not hesitate to define as authentic artworks.

SHADE DIFFERENCES: shade differences might vary according to the shape of the majolica plates even within the same production lot. The biscuit, its shape, and the firing temperatures of each single glaze create colour shades that make each majolica plate unique.

General sales terms and conditions

ORDERS: must be sent in written form by either email or fax (+39 423 527250).
The article number, article description and desired quantity must be specified. Order modifications and/or additions must be communicated to our sales department at least TWO DAYS BEFORE the confirmed loading date.

RETURNS: any returns must be AUTHORISED exclusively by our MANAGEMENT.
Returns are accepted only if the product is in as-new condition, and will be credited at 70% of the purchase price. The return document must give the references of the delivery document or invoice issued by "Superior" - Gruppo Piazzetta S.p.A. and the reason for the return.

DISPUTES: disputes will not be considered after 7 days from delivery date.
A claim must be submitted, at time of delivery, against the transporter directly on the carrier document and copy of the document must be sent to our sales department in case of damages to the products caused during transportation.

PAYMENT DELAY: the delay of payment will result in an interest compensation towards "Superior" - Gruppo Piazzetta S.p.A. as per the Italian Legislative Decree 231/2002 and any subsequent amendments. Furthermore, the lack of total or partial payment of the invoices, will, at "Superior" - Gruppo Piazzetta S.p.A.'s discretion, result in suspension or cancellation of all pending orders.

WARRANTY: Please consult the full document of the Warranty Contract, available on the website https://easylife.piazzetta.com.

DEFINITION OF RIGHT / LEFT SIDE FIREBOX: For any fireplace with option D (right) or S (left), it must be stated in the order which sided option firebox is being requested, where applicable: right or left see illustration below.
Point of observation determines the D (right) or S (left); the closed side, opposite to the glass side determines the side when the person is in front of the fireplace.

D (Right) SIDED FIREPLACE
(closed side is on the RIGHT)

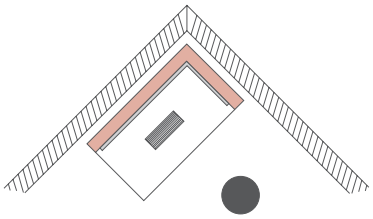

S (Left) SIDED FIREPLACE
(closed side is on the LEFT)

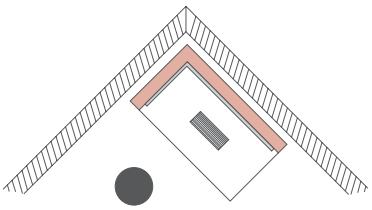

The present price list annuls and replaces all preceding price lists. All products are packaged on non-returnable pallets. Prices are considered to be without VAT (government sales taxes). "Superior" - Gruppo Piazzetta S.r.l. reserves the right to modify and/or delete all printed material, if deemed necessary by "Superior" - Gruppo Piazzetta S.r.l. without any written or prior notice.

PIAZZETTA
PASSIONE ACCESA

GRUPPO PIAZZETTA
Via Montello, 22 - 31011 Casella d'Asolo (TV) Italy
tel.+39 0423 5271 - fax +39 0423 55178
www.piazzetta.it - info@piazzetta.it
800-842026

AZIENDA CERTIFICATA ISO 9001:2008